지시의 용접치수	지시의 모서리부분	지시의 일반 공차	절삭가공부분	구분	0.5 ~ 6	6 ~ 30	30 ~ 120	120 ~ 315	315 ~ 1000	1000 ~ 2000
	지시되지 않은 모서리에서 C = 0.3~1.2 R = 0.3~1.2			공차	±0.1	±0.2	±0.3	±0.5	±0.8	±1.2

표면거칠기									
Ra	25	12.5	6.3	3.2	1.6	0.8	0.2	0.1
Rmax	100S	50S	25S	12.5S	6.3S	3.2S	0.8S	0.4S
다듬질								

NO.	DATE	REVISION & DESCRIPTION	SIGNATURE REVIEWED	SIGNATURE CHECKED

압력강판 세척용 스프레이 헤더의 자동세척 장치 특허등록 등록번호 : 0451616

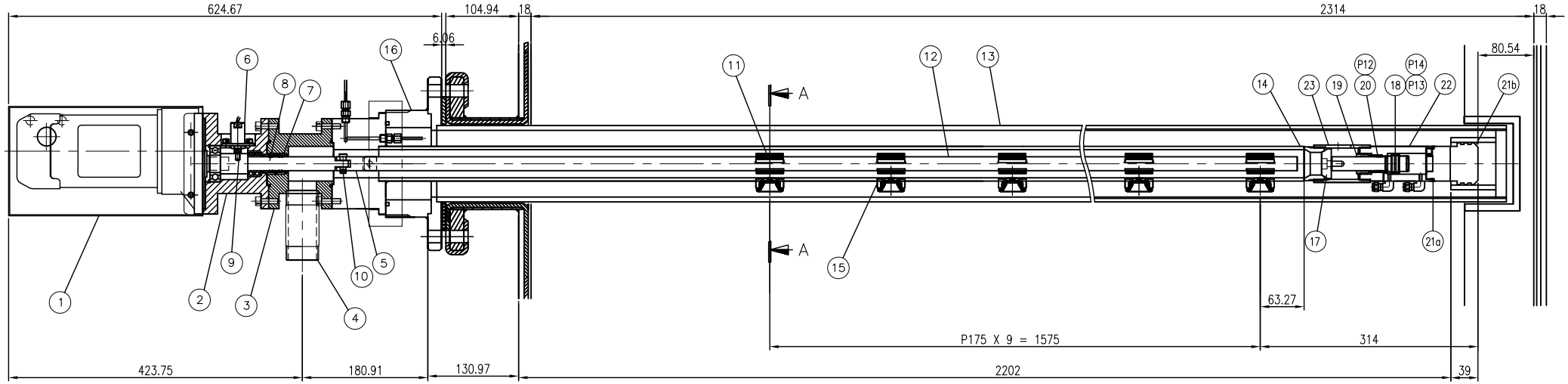

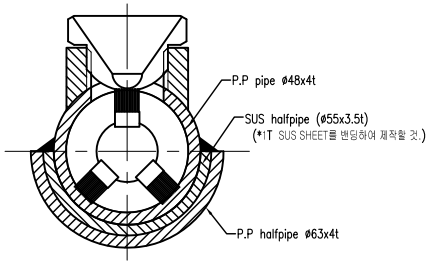

SECTION A-A(S=3:1)

NO	COMPONENT	MATERIAL	Q'TY
20	BACKUP RING	TEFRON	1
19	PLUG	P.P	2
18	CYLINDER ROD/CYLINDER NUT	PEEK	1
17	VALVE	P.P	1
16	UNION ADAPTOR/END SOCKET	P.P	1
15	NOZZLE BASE	P.P	10
14	HEADER	P.P	1
13	PROTECTOR	P.P	1
12	BRUSH SHAFT	C-PVC	1
11	BRUSH	P.P	10
10	PIN	P.P	2
9	DOG	SUS316	1
8	SHAFT	PEEK	1
7	SHAFT GUIDE	TEFRON	1
6	SENSOR BRACKET	P.P	1
5	JOINT	P.P	1
4	IN-LET PIPE	P.P	1
3	BODY	PVDF	1
2	HOUSING	PVDF	1
1	COVER	SUS316	1

COMPONENT	MATERIAL	Q'TY
SNAP RING(HOLE) ø52	SUS304	1
P15 O-RING (P-34)	VITON	2
P14 O-RING (P-18)	VITON	2
P13 O-RING (P-20)	VITON	2
P12 DISK JET NOZZLE	TEFRON	10
P11 UNION(100A)	P.P	2
P10 O-RING (G60)	VITON	1
P9 O-RING (P-24)	VITON	2
P8 O-RING (P-20)	VITON	3
P7 LIP SEAL (ø20)	TEFRON	2
P6 BALL BEARING (6205ZZ)	PUR	2
P5 BALL BEARING (6904ZZ)	PUR	1
P4 SENSOR	TEFLON	1
P3 KEY (6X6X25L)	SUS304	1
P2 MOTOR (220Wx1/50)	PUR	1
P1		
23 VALVE ADATER	P.P	1
22 CYLINDER BODY	PEEK	1
21 CYLINDER CAP/GASKET	P.P/TEFRON	1

POS-M POSCO MACHINERY CO., LTD

Spraying Systems Co., Korea

NO.	DESCRIPTION	MAT'(KS)	UNIT QUANTITY	TOTAL QUANTITY	PERUNIT WEIGHT(kg)	TOTAL WEIGHT(kg)	REMARK'S
-	SELF CLEANING SPRAY HEADER	P.P/PVDF	40	42	0	0	0

posco

SCALE	NS	PROJECTION	
SIZE	A1	DIMENSION	mm
EQUIPMENT	0		
MAKER DWG. NO.	56148-090-A1		
POSCO DWG. NO.	0		

TITLE		
GWANGYANG PLANT	RINSE TANK SELF CLEANIG SHOWER HEADER ASSEMBLY	
2POL FACILITY		

	DRAWN	CHECKED	REVIEWED	APPROVED
POSCO SIGNATURE				
DATE				
POS-M	j.h.jung 2008.10.12	y.y.lim 2008.10.13		b.s.kim 2008.10.14

지시의 용접치수	지시의 모서리부분	지시의 용접치수	허용가공부분치수	구분	0.5 ~ 6	6 ~ 30	30 ~ 120	120 ~ 315	315 ~ 1000	1000 ~ 2000
	지시의 용접부 모서리 제거 C = 0.3~1.2 R = 0.3~1.2			급	±0.1	±0.2	±0.3	±0.5	±0.8	±1.2

표 면 거 칠 기

Ra	25/	12.5/	6.3/	3.2/	1.6/	0.8/	0.2/	0.1/
Rmax	100S	50S	25S	12.5S	6.3S	3.2S	0.8S	0.4S
다듬질	∼	▽		▽▽		▽▽▽		▽▽▽▽

LEG OF CONTINUOUS FILLET WELD

GRADE	THIN METAL THICKNESS (OVER-INCL)								
	4	4~6	6~9	9~12	12~16	16~20	20~25	25~32	32~40
A	3	4	5	6	8	10	12	14	16
B	3	3	4	5	5	7	8	10	12
C	3	3	3	4	5	6	7	8	8

NOTE : UNLESS OTHERWISE SPECIFIED ALL JOINTS SHALL BE CONTINUOUS FILLET WELDED TO GRADE B

NO.	DATE	REVISION & DESCRIPTION	SIGNATURE REVIEWED	SIGNATURE CHECKED
△1				
△2				

D R A W I N G L I S T

NO.	POSCO DWG NO.	MAKER DWG NO.	DRAWING TITLE	SIZE	REVISION DATE 0	1	2	3	REMARK
1		56148-090-00	COVER SEET	A1					
2		56148-090-DL	DRAWING LIST	A1					
3		56148-090-L1	P&ID	A1					
4		56148-090-F1	FLOW-CHART	A1					
5		56148-090-A1	ASSEMBLY	A3					
6		56148-090-P2	HOUSING	A3					
7		56148-090-P3	BODY	A3					
8		56148-090-P4	IN-LET PIPE	A3					
9		56148-090-P5	JOINT	A3					
10		56148-090-P6	SENSOR BRACKET	A3					
11		56148-090-P7	SHAFT GUIDE	A3					
12		56148-090-P8	SHAFT	A3					
13		56148-090-P9	SENSOR DOG	A3					
14		56148-090-P10	PIN	A3					
15		56148-090-P11	BRUSH	A3					
16		56148-090-P12	BRUSH SHAFT	A3					
17		56148-090-P13	PROTECTOR	A3					
18		56148-090-P14	HEADER	A3					
19		56148-090-P15	NOZZLE BASE	A3					
20		56148-090-P16	UNION ADAPTOR/END SOCKET	A3					
21		56148-090-P17	VALVE	A3					
22		56148-090-P18	CYLINDER ROD/CYLINDER NUT	A3					
23		56148-090-P19	PLUG	A3					
24		56148-090-P20	BACKUP RING	A3					
25		56148-090-P21	STOPPER/GASKET	A3					
26		56148-090-P22	CYLINDER BODY	A3					
27		56148-090-P23	VALVE ADAPTER	A3					
28		56148-090-P24	LAY-OUT	A1					
29		56148-090-P25	HEADER ASSEMBLY	A1					
30		56148-090-P26	HEADER	A1					
31		56148-090-P27,8	PIPE& MANIFOLDER	A1					
32		56148-090-P29	FINAL RINSE 1 (1/3)	A1					
33		56148-090-P30	FINAL RINSE 1 (2/3)	A1					
34		56148-090-P31	FINAL RINSE 1 (3/3)	A1					
35		56148-090-P32	FINAL RINSE 2 (1/3)	A1					
36		56148-090-P33	FINAL RINSE 2 (2/3)	A1					
37		56148-090-P34	FINAL RINSE 2 (3/3)	A1					
38		56148-090-P35	FINAL RINSE 3 (1/3)	A1					
39		56148-090-P36	FINAL RINSE 3 (2/3)	A1					
40		56148-090-P37	FINAL RINSE 3 (3/3)	A1					
41		56148-090-P38	FITTING	A3					
42		56148-090-P39	TEFRON HOSE	A3					

NO.	DATE	REVISIONS & DESCRIPTION	ENG'R	APPR'D

POSCO MACHINERY CO., LTD

Spraying Systems Co., Korea

NO.	DESCRIPTION	MAT'(KS)	UNIT QUANTITY	TOTAL	PERUNIT WEIGHT(kg)	TOTAL

posco

TITLE: GWANGYANG PLANT / NO.2POL EQUIPMENT — RINSE TANK SELF CLEANING SPRAY HEADER DRAWING LIST

	DRAWN	CHECKED	REVIEWED	APPROVED
POSCO SIGNATURE				
POSCO DATE				
POS-M	j.h.jung 2008.10.12	y.y.lim 2008.10.13		b.s.kim 2008.10.14

REMARK'S	
SCALE	NONE
PROJECTION	
SIZE	A1
DIMENSION	mm
REF. DWG. NO. EQUIPMENT	
MAKER DWG. NO.	56148-090-DL
POSCO DWG. NO.	

지시의 용접치수	지시의 모서리부분	지시의 용접되지 않은 치수	일반 공차	구분	0.5 ~ 6	6 ~ 30	30 ~ 120	120 ~ 315	315 ~ 1000	1000 ~ 2000
	지시되지 않은 모서리 C = 0.3~1.2 R = 0.3~1.2			정밀급	±0.1	±0.2	±0.3	±0.5	±0.8	±1.2

표면거칠기									
Ra	✓	25/	12.5/	6.3/	3.2/	1.6/	0.8/	0.2/	0.1/
Rmax		100S	50S	25S	12.5S	6.3S	3.2S	0.8S	0.4S
다듬질	~	▽		▽▽		▽▽▽		▽▽▽▽	

NO.	DATE	REVISION & DESCRIPTION	SIGNATURE REVIEWED	SIGNATURE CHECKED
1				
2				
3				

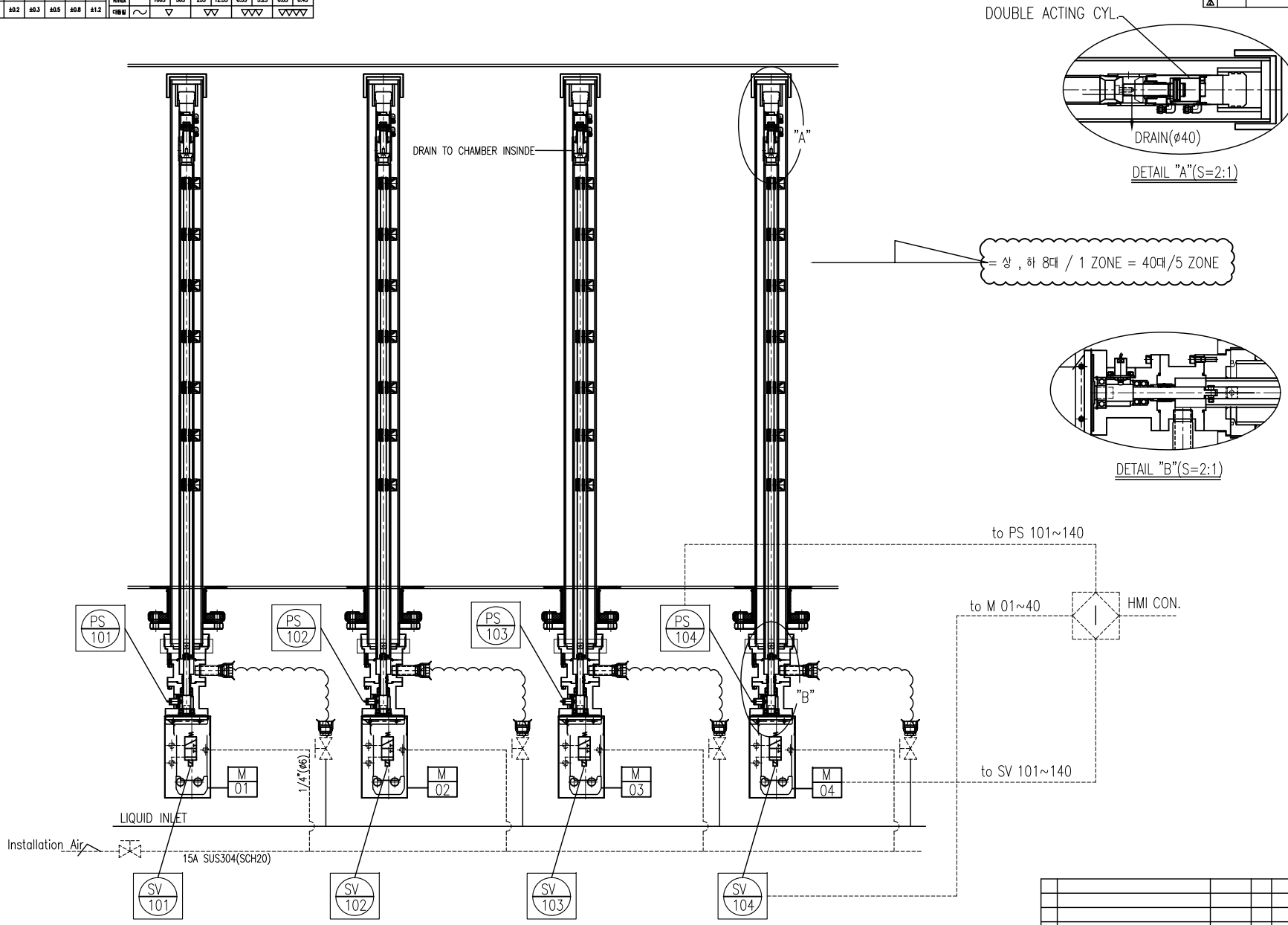

NO.	DESCRIPTION	MAT'(KS)	UNIT QUANTITY	TOTAL	PERUNIT WEIGHT(kg)	TOTAL	REMARK'S
0	0	0	0	0	0	0	0

NO.	DATE	REVISIONS & DESCRIPTION	ENG'R	APPR'D

POS-M POSCO MACHINERY CO., LTD

Spraying Systems Co., Korea

posco

TITLE	GWANGYANG PLANT / #1POL FACILITY	SELF CLEANIG SHOWER HEADER FLOW-CHART	
SCALE	NS	PROJECTION	
SIZE	A1	DIMENSION	mm
REF. DWG. NO.	EQUIPMENT	0	
	MAKER DWG. NO.	56148-090-F1	
POSCO DWG. NO.		0	

	DRAWN	CHECKED	REVIEWED	APPROVED
POSCO SIGNATURE	0			
POSCO DATE	0			
POS-M SIGNATURE	j.h.jung	y.y.lim		b.s.kim
POS-M DATE	2008.10.12	2008.10.13		2008.10.14

AUTODESK 교육용 제품으로 제작됨

지시의 용접치수	지시의 모서리부분	지시의 일반 허용차	형상 구분	구분	0.5 ~ 6	6 ~ 30	30 ~ 120	120 ~ 315	315 ~ 1000	1000 ~ 2000
	지시되지 않은 모서리 허용차 C = 0.3~1.2 R = 0.3~1.2			급	±0.1	±0.2	±0.3	±0.5	±0.8	±1.2

표면거칠기									
Ra	✓	25 ▽	12.5 ▽	6.3 ▽	3.2 ▽	1.6 ▽	0.8 ▽	0.2 ▽	0.1 ▽
Rmax		100S	50S	25S	12.5S	6.3S	3.2S	0.8S	0.4S
다듬질	~	▽		▽▽		▽▽▽		▽▽▽▽	

NO.	DATE	REVISION & DESCRIPTION	SIGNATURE REVIEWED	SIGNATURE CHECKED
1				
2				
3				

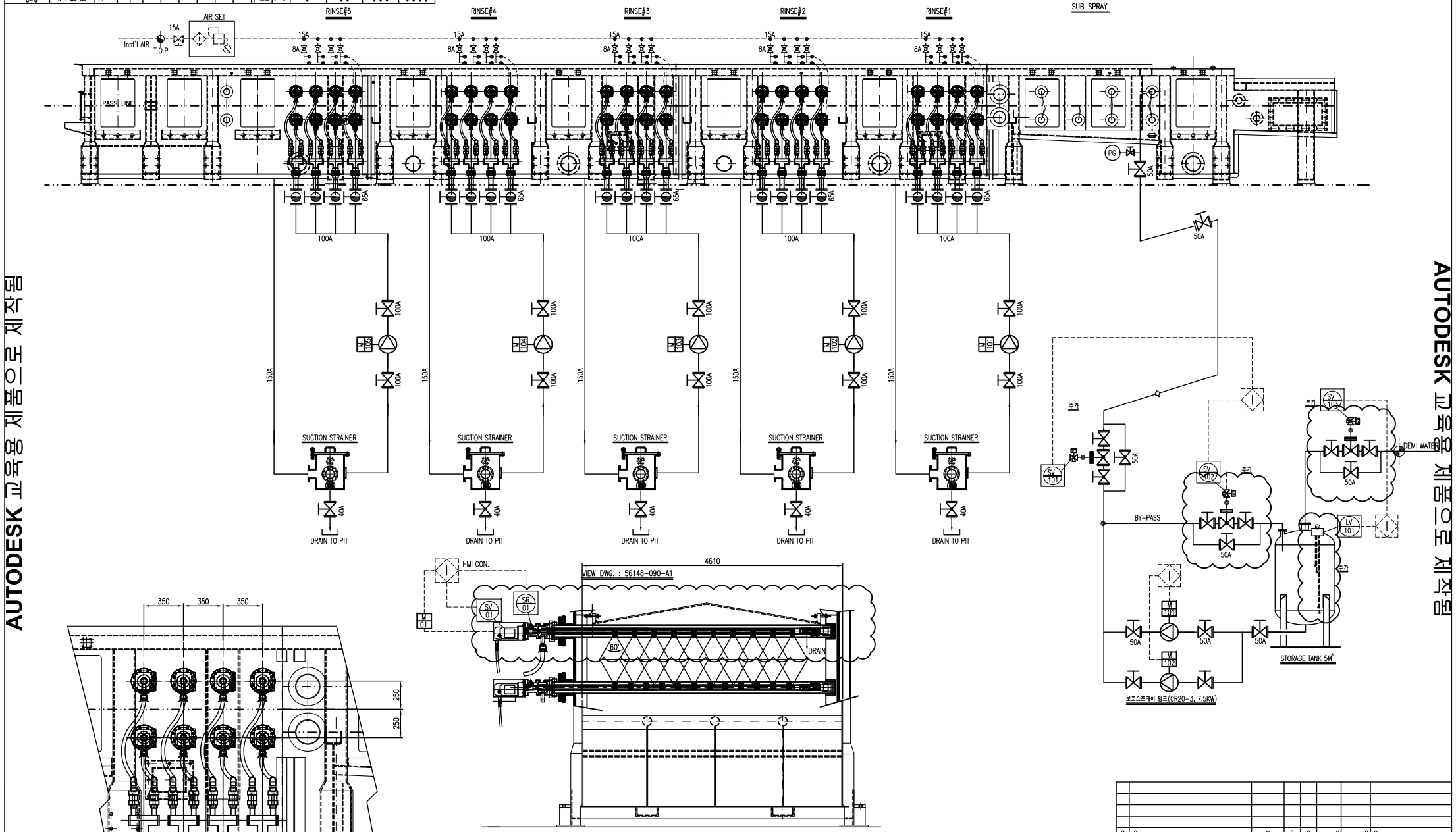

NO.	DATE	REVISIONS & DESCRIPTION	ENG'R	APPR'D

POS-M POSCO MACHINERY CO., LTD

Spraying Systems Co., Korea

NO.	DESCRIPTION	MAT'(KS)	UNIT QUANTITY	TOTAL QUANTITY	PERUNIT WEIGHT(kg)	TOTAL WEIGHT(kg)	REMARK'S
0	0	0	0	0	0	0	0

posco

TITLE: GWANGYANG PLANT #2POL FACILITY — SELF CLEANING SHOWER HEADER, P&ID

	DRAWN	CHECKED	REVIEWED	APPROVED
POSCO SIGNATURE				
DATE				
POS-M	j.h.jung 2006.10.12	y.y.lim 2006.10.13		b.s.kim 2006.10.14

SCALE	NS
PROJECTION	
SIZE	A1
DIMENSION	mm
EQUIPMENT	
MAKER DWG. NO.	56148-060-L1
POSCO DWG. NO.	

AUTODESK 교육용 제품으로 제작됨

AUTODESK 교육용 제품으로 제작됨

AUTODESK 교육용 제품으로 제작됨