Cloud-Sellers® 360 & 180 Series Tank Cleaners

USER GUIDE

Cloud-Sellers 360

Cloud-Sellers 180

Spraying Systems Co.®
Experts in Spray Technology

MI-CLOUD-SELLERS
360 & 180
spray.com

TABLE OF CONTENTS

TABLE OF CONTENTS 2

GENERAL SAFETY INSTRUCTIONS 3
- READ THE FOLLOWING INSTRUCTIONS: 3

PRINCIPLES OF OPERATION 4
- TECHNICAL SPECIFICATIONS 4

PREVENTATIVE MAINTENANCE 7
- CLEANING SOLUTION FILTRATION 7
- GEARBOX LUBRICATION 7
- SEALS AND O-RINGS 7
- INSPECTION OF WEAR PARTS 7

DISASSEMBLY PROCEDURE 8
- STATOR AND ROTOR REMOVAL 8
- NOZZLE HOUSING ASSEMBLY REMOVAL 8
- GEARBOX COVER REMOVAL 8
- GEARTRAIN REMOVAL 9
- GEARBOX DISASSEMBLY 9
- TEE HOUSING AND INLET STEM 9

ASSEMBLY PROCEDURE 10
- INLET STEM ASSEMBLY 10
- TEE HOUSING ASSEMBLY 10
- GEARBOX ASSEMBLY 10
- GEARTRAIN ASSEMBLY 10
- GEARBOX COVER ASSEMBLY 11
- ROTOR INSTALLATION 11
- NOZZLE HOUSING ASSEMBLY 11

TROUBLESHOOTING GUIDE 12

FINAL INSPECTION 12

STATOR INSTALLATION 12

WARRANTY 14

PRODUCT VIEWS 15

CLOUD-SELLERS® 360 WITH TWO NOZZLE HUB 20

CLOUD-SELLERS 360 WITH THREE NOZZLE HUB 20

CLOUD-SELLERS® 360 SELF-RINSING WITH TWO & THREE NOZZLE HUB 21

CLOUD-SELLERS® 180 WITH THREE NOZZLE HUB 22

DATA SHEET 23

EXPLODED VIEW AND PARTS LIST 24

IMPORTANT! ***Read all instructions in this manual before operating machine.***

GENERAL SAFETY INSTRUCTIONS

READ THE FOLLOWING INSTRUCTIONS:

WARNING: All safety related and operating instructions should be read before the nozzle is operated. Follow all operating instructions. Failure to do so could result in serious injury.

- **WARNING:** It is important to recognize proper safety precautions when using a pressurized spray system. Fluids under pressure can penetrate skin and cause severe injury.
- **WARNING:** When dealing with pressure applications, the system pressure should never exceed the lowest rated component. Always know your system and all component capabilities, maximum pressures and flow rates.
- **WARNING:** Before performing any maintenance, make sure all liquid supply lines to the machine are shut off and /or disconnected and chemical/fluid are drained.
- **WARNING:** The use of any chemicals requires careful control of all worker hygiene.
- **WARNING:** Spraying Systems Co. does not manufacture or supply any of the chemical components used in this equipment and is not responsible for their effects. Because of the large number of chemicals that could be used and their different chemical reactions, the buyer and user of this equipment should determine compatibility of the materials used and any of the potential hazards involved.
- **WARNING:** Spraying Systems Co. strongly recommends the use of appropriate safety equipment when working with potentially hazardous chemicals.
- **WARNING:** Before use be sure appropriate connections are secure and made to withstand weight and reaction forces of the operating unit.

This equipment includes but is not limited to:

- Protective hat
- Safety glasses or face shield
- Chemical-resistant gloves and apron
- Long sleeve shirt and long pants

NOTE: Always remember to carefully read the chemical manufacturer's label and follow all directions.

- **WARNING:** DO NOT USE TO SPRAY FLAMMABLE LIQUIDS--SUCH USE COULD RESULT IN FIRE OR EXPLOSION CAUSING BODILY INJURY OR DEATH.
- **WARNING:** It is important to operate equipment within the temperature range of all components. Also insure that appropriate time lapses or proper safety equipment is used when handling components after they're exposed to high temperatures.
- **WARNING:** Never operate tank cleaning equipment in the open due to the potential of bodily injury.
- **WARNING:** Remove equipment from the tank before attempting any repairs.
- **WARNING:** If walking on top of a tank is deemed safe and is necessary, use proper safety precautions to protect individuals as well as the equipment.
- **WARNING:** Do not put any part of your body in the tank during operation of the tank cleaner. This is NOT a safe procedure for verification of operation.
- **WARNING:** Proper hoisting procedures should be used when installing and removing all equipment.
- **WARNING:** To insure the safety of the equipment as well as the individuals using them, only use Spraying Systems Co. components.
- **WARNING:** When packaging and transporting use structurally sound boxes or crates that can handle the weight of the equipment.
- **WARNING:** Tank cleaners should be flushed out with clean water before they're stored or shipped to minimize health hazards or cross contamination.
- **WARNING:** Do not use any equipment outside the intended purposes of the product. Misuse can result in personal injury or product damage.

The container being cleaned should be sealed as best as possible while the Cloud-Sellers model is running its cycle. The combination of temperature, cleaning solution, spray impact and the potential toxic materials being cleaned can cause a hazard to anyone in the path of the spray.

NOTE: Due to the possible build up of electrical charge caused by the nature of the machine it's vital to avoid applications involving combustible fluids and materials.

PRINCIPLES OF OPERATION

Cloud-Sellers® 360 series tank cleaning machine is hydraulically driven by the cleaning solution. As the fluid passes through the inlet, a stationary turbine (stator) forces the liquid past the rotor which causes it to rotate at high speed. The rotor is fastened to a rotor shaft which is supported radially by an upper and lower bearing. The rotor shaft extends into the gearbox, and is connected to the geartrain which reduces the speed of the rotor shaft by either 655:1 or 273:1, depending on machine configuration, and transmits the rotation to the Tee Housing on a horizontal plane.

The Tee Housing has a fixed bevel gear which drives a bevel gear mounted on the Nozzle Housing. During tee housing rotation in the horizontal plane, the nozzle housing rotates in the vertical plane simultaneously. Due to the difference in the number of teeth on the bevel gears, an indexing occurs which precisely advances the nozzle housing rotation ahead of the tee housing, creating the spherical 360 degree spray pattern for complete tank coverage.

Cycle times will vary with water pressure, flow rate and the machine configuration. Because no two cleaning applications are the same, Cloud-Sellers 360 tank cleaning machine can be configured for specific cycle times, nozzle dwell time and water usage. One basic machine can be altered with interchangeable nozzles, rotors, stators and geartrain ratios to maintain the highest degree of operating efficiency. Refer to the performance data sheet for sample cycle times and water usage, or call your sales representative for assistance in choosing the proper machine configuration for your tank cleaning needs.

Cloud-Sellers® 360 series has been designed for a long reliable service life. Every attempt has been made to design in reliability, but like all other man-made mechanical devices, this machine is subject to altered performance or break downs. Preventative maintenance is the key to maintaining uninterrupted machine performance, and minimal downtime. Due to the numerous factors that affect rotary tank cleaners such as flow rate, pressure, chemical concentration, etc., it is necessary to create specific Preventative Maintenance (PM) programs for each machine that is being used under various operating conditions. Refer to Page 7: Preventative Maintenance or check with your sales representative for specific recommendations.

TECHNICAL SPECIFICATIONS

MATERIALS AND SPECIFICATIONS

Casting Material: 316L Stainless Steel

Weight:	dual-nozzle	360	25 lbs.	11.35 kg.
	triple-nozzle	360	26 lbs.	11.80 kg.
	triple-nozzle	180	29 lbs.	13.17 kg.
Height:	dual- & triple-nozzle	360	13.3 in.	338 mm
	triple-nozzle	180	12.25 in.	311 mm
Minimum Tank Opening (Inside Diameter):				
	dual-nozzle	360	6.25 in.	158 mm
	triple-nozzle	360	10.25 in.	260 mm
	triple-nozzle	180	12.25 in.	311 mm

INLET CONNECTION

2" NPT (F) with 2-1/2" quick disconnect (M)
2" NPT (F) with 2-1/2" NST (NH) hose thread (M)
2" BSPT (F) with 2-1/2" quick disconnect (M)

Rotor Shaft: Stainless Steel substrate is plasma flame sprayed with Chromium Oxide, then ground to finish dimension. The final product is a hard, dense surface that is resistant to abrasive wear, high temperatures and chemical corrosion. The smooth surface also lends itself to sealing with rotary seals. The thrust imparted on the rotor shaft is distributed by a tungsten carbide thrust washer fastened to the rotor shaft pinion gear. Carbide is an excellent wear material and has very high corrosion resistance.

Main Bearings: The main bearings that support the rotation of the Tee Housing and Nozzle Housing are composed of a carbon fiber reinforced thermoplastic material, with 15% PTFE for lubricant. These bearings have an extremely low coefficient of thermal expansion, and both a low water absorption and wear factor. Ball bearings have been eliminated by the use of this bearing material.

OPERATING PRESSURE AND FLOW RANGE

40 – 350 psi	2.81 – 24.61 kg /cm
30 – 300 gpm	1.89 – 18.92 ltr / sec

Temperature Range: up to 250° F (121° C)

Seals: Static seals (o-rings) are compounded for extended use in various tank cleaning applications. Several different types of o-rings are available to suit specific tank cleaning environments. Dynamic seals (which seal rotating parts) are specially designed spring or pressure seals. The jacket material is a Teflon alloy which increases wear life and corrosion resistance.

Geartrain: The internal gearbox reduction is achieved using a spur gear system, and is available in two gear ratios: 655: 1 and 273: 1.

Geartrain Lubrication: Two types of lubrication are available; sealed gearbox with food grade gear oil or flow-thru gearbox; where the cleaning solution lubricates the gears. See Preventative Maintenance, page 7 for specific types of oil.

Nozzle Housing Drive: Pin drive or clutch drive is available. Pin drive is recommended for CIP applications, while the clutch drive is recommended for portable use, where the machine will be handled often.

CIP Applications: Several self cleaning features are built into all machines; rinsing of the bevel gears and ring gear assist in preventing a buildup of debris that could interfere with operating efficiency. CIP models can also be equipped with the optional self rinse nozzle which washes the exterior surfaces of the machine while it is operating. Additional passages allow high pressure rinsing of internal areas of the machine where deposits of solids could allow bacterial growth. Drainage holes can be provided for complete drainage of cleaning solution.

Nozzle Sizes: Nozzles are available in the following sizes:

A	1/4 in.	6.35 mm
B	9/32 in.	7.14 mm
C	5/16 in.	7.94 mm
D	3/8 in.	9.53 mm
E	7/16 in.	11.11 mm
F	1/2 in.	12.70 mm
G	9/16 in.	14.29 mm
H	5/8 in.	15.58 mm

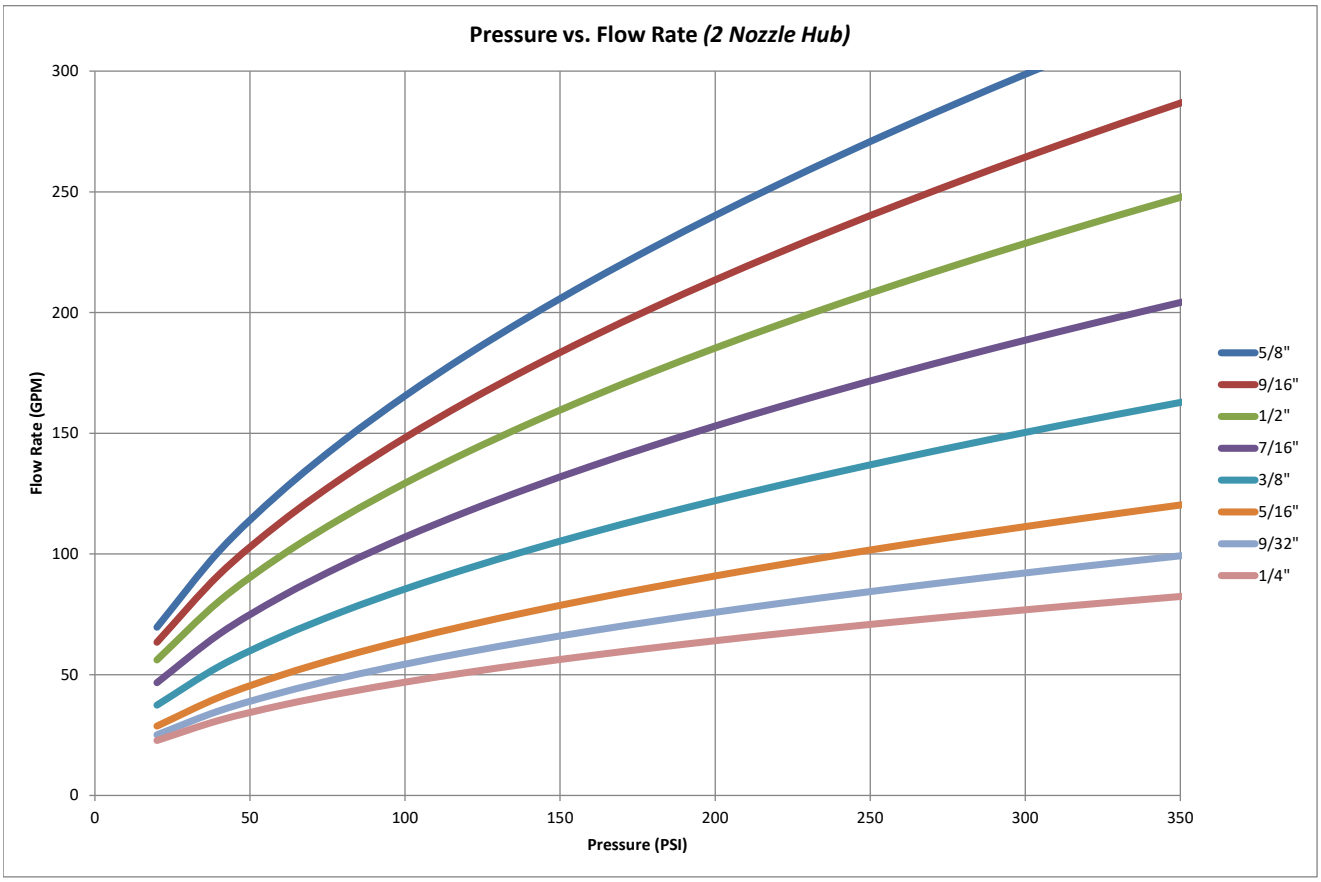
Pressure vs. Flow Rate (2 Nozzle Hub)
Flow Rate (GPM)
Pressure (PSI)
0
50
100
150
200
250
300
350
5/8"
9/16"
1/2"
7/16"
3/8"
5/16"
9/32"
1/4"

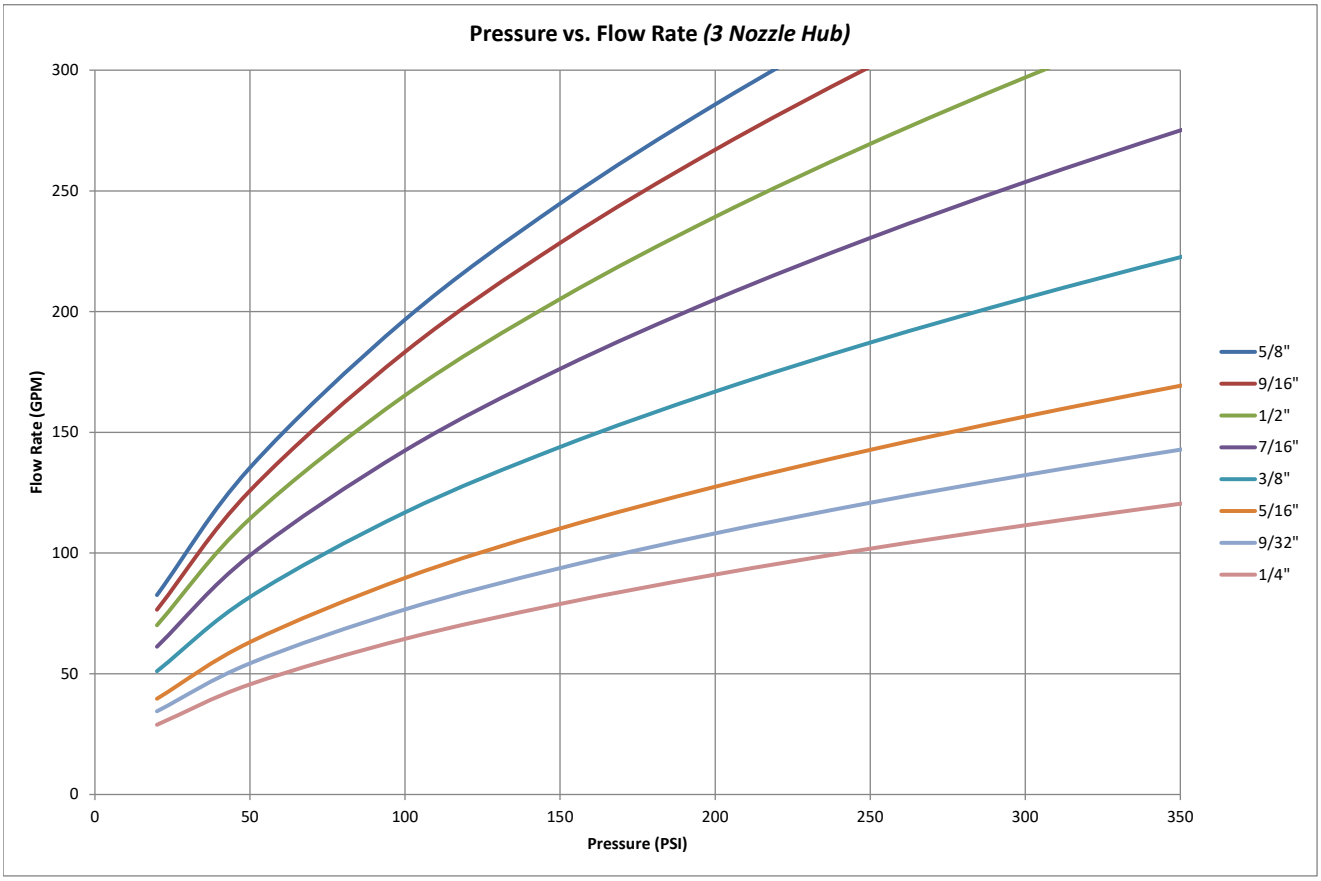
Pressure vs. Flow Rate (3 Nozzle Hub)
Flow Rate (GPM)
Pressure (PSI)
0
50
100
150
200
250
300
350
5/8"
9/16"
1/2"
7/16"
3/8"
5/16"
9/32"
1/4"

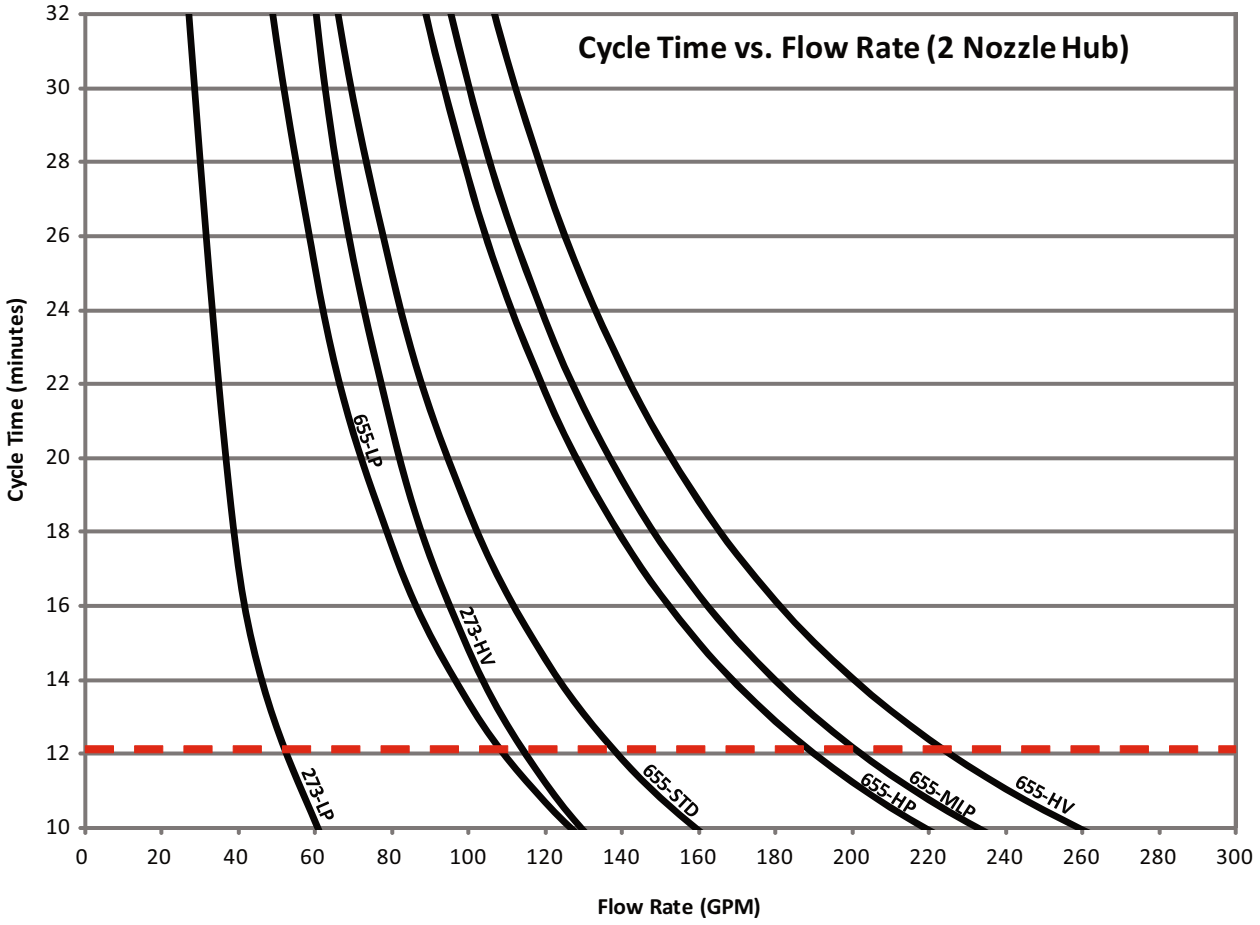
Cycle Time vs. Flow Rate (2 Nozzle Hub)
Cycle Time (minutes)
Flow Rate (GPM)
273-LP
655-LP
273-HV
655-STD
655-HP
655-MLP
655-HV

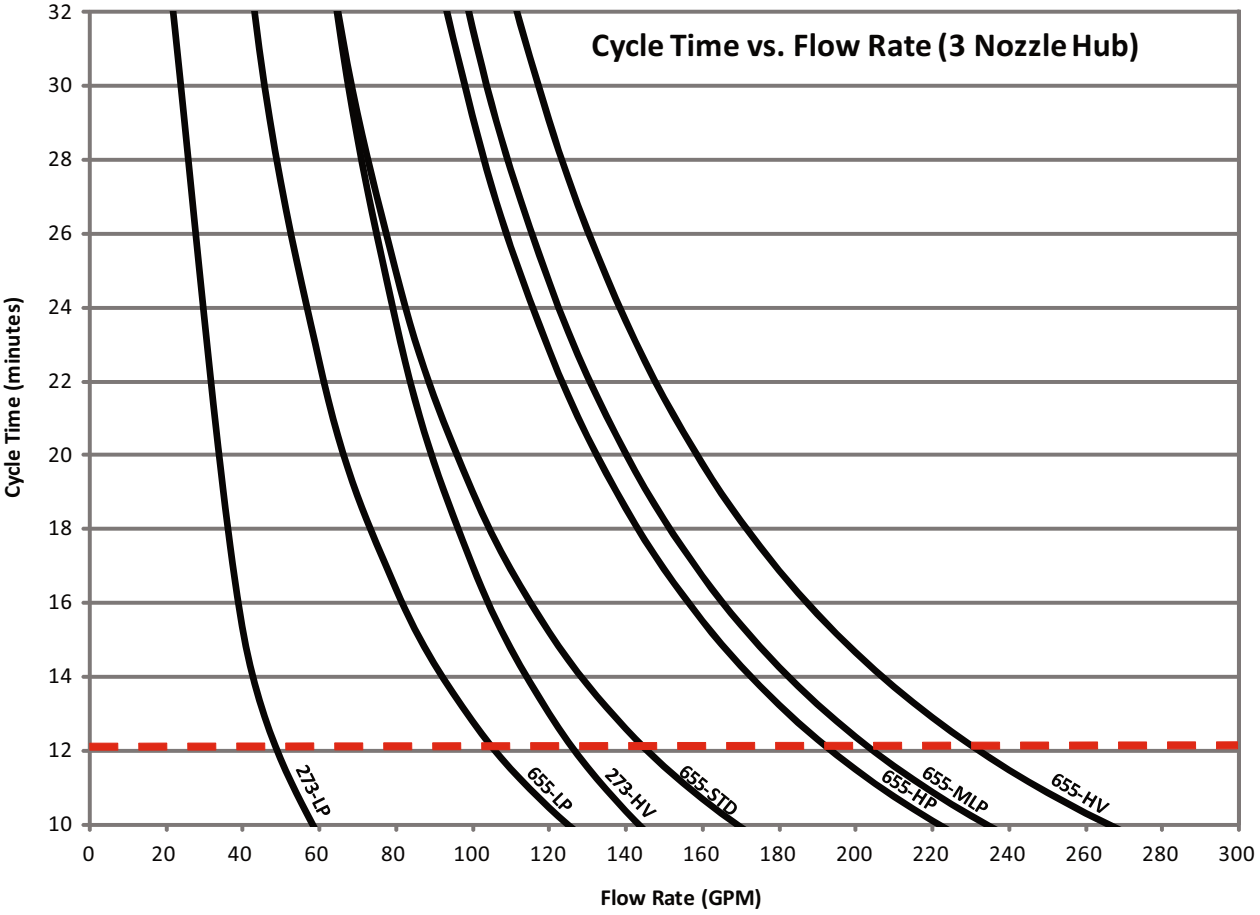
Cycle Time vs. Flow Rate (3 Nozzle Hub)
Cycle Time (minutes)
Flow Rate (GPM)
273-LP
655-LP
273-HV
655-STD
655-HP
655-MLP
655-HV

PREVENTATIVE MAINTENANCE

Cloud-Sellers® 360 series has been designed to operate under a wide variety of conditions and to provide long-term reliability with a minimum amount of servicing. All wear parts are engineered for quick inspection and simple replacement. Servicing can be accomplished in the field, eliminating the need to send machine elsewhere for repair or maintenance.

Each cleaning application is unique, and therefore affects the seals, o-rings, cups and bearings in a different way. A good preventative maintenance program tailored for your specific tank cleaning machines will help to eliminate the possibility of failure during a cleaning cycle, or the need to replace major cast parts later from excessive wear. The expense of periodic inspection and subsequent replacement of wear parts on a regular basis is less costly than waiting until the machine fails to replace parts. The added advantage to PM is that you have control over when a machine is to be serviced; either between batches or during the off season, instead of during a cleaning cycle when you need reliability the most. Check with your sales representative for advice on establishing a PM program at your facility.

CLEANING SOLUTION FILTRATION

It is recommended that a strainer be placed in line with the pump to filter out small particles which could lodge inside the tank cleaning machine decreasing its efficiency. This is very important where recirculation of the cleaning solution is being employed. The mesh and wire size of the strainer will vary depending on the type of cleaning and particle size. Be certain that the water supply system has been flushed out to remove any solid particles before attaching Cloud-Sellers 360. Following each use of the Cloud-Sellers 360, we recommend a clean water rinse to thoroughly remove any cleaning solution (recirculated or new) residue which could affect the seals and o-rings during non operational storage.

GEARBOX LUBRICATION

Oil level inside the gearbox should be checked regularly; the specific time period to be determined by the type of service the machine is in. The more severe the service, the more often it is recommended to check the oil level. To inspect oil level, turn machine upside down and remove the gearbox cover. The oil level should just cover the lower (22) gearset on the (18) final drive shaft (about 1" below the machined end of the gearbox). All lubricated machines are supplied with the following type of oil:

OIL TYPE: Food Grade U.S.D.A. Acceptable H-1
QTY. 14 oz. (414 ml.) S.A.E. – 90

Oil Alternatives: For non-food industry applications, H-2 lubricants can be used such as Keystone Keygear 90, KLC-20/50 or KSL-365. Lightweight gear oils (50-90) are also suitable. It should be noted that heavy weight (140) gear oils or greases will alter the performance of the machine regarding cycle times. If upon inspection of the gearbox there is cleaning solution mixed into the gear oil, then it is advisable to inspect the rotor shaft seals (31), final shaft seal (38) and the gearbox cover o-ring (34). Replace seals and o-rings as necessary.

SEALS AND O-RINGS

All of the standard Cloud-Sellers 360 series are shipped with o-rings constructed of a Flourocarbon Elastomer (Viton) compound. This compound is suitable for a broad range of temperatures and chemical resistance. Other materials are available. The type of cleaning application and chemicals used will in large part determine the length of service for o-rings. Upon inspection, if an o-ring has any cracks, worn sections or is swollen in size, then replacement is recommended.

The spring energized seals (part #'s 35, 36, 37 and 38) have a PTFE alloy jacket which increases the longevity and sealing capabilities. Once the seals have worn thru the jacket to the spring, they are no longer providing a proper seal. Particles in the cleaning solution are then able to lodge in the machine, decreasing its efficiency, and perhaps stopping it altogether. Prolonged use with worn out seals can damage the castings the seals were meant to protect.

A regularly scheduled inspection program is recommended for the main bearing seals (35 and 36). Inspection is easily accomplished by removing the nameplate (6) and the nozzle housing assembly (5). If these seals are worn, or need to be cleaned of deposits, then the tee-housing seals will also need attention.

INSPECTION OF WEAR PARTS

All of the bearing clearances in Cloud-Sellers 360 series have been designed to provide the best possible support for the adjacent parts, while maintaining reliability between servicing. Most of the bearing clearances are very close when the machine is assembled at the factory. This allows for longer periods of operation before overall machine performance is altered due to bearing wear. In many cases, the bearings can wear down 25% and the machine will continue to operate properly. It should be noted that while the machine may continue to operate with worn bearings, it is recommended that bearings be changed at the first evidence of wear to protect the long term performance and reliability of the unit. In severe service (high pressure and/ or chemical concentration), the period between servicing will be shortened. Several parts in Cloud-Sellers 360 have been designed as replaceable wear parts. These parts are easily replaced in the field at a reasonable cost, with a minimum of down time or labor costs.

Main Bearing: After removal, inspect the bearings; they may have grooves on the O.D. from particles or deposits that may have lodged between the bearing and cup during machine operation.

Also, if the clearance between the bearing O.D. and the cup I.D. is loose compared to when new, it may be time to change the bearings. The normal clearances between cups and bearings are held to close tolerances to maintain proper mesh of the bevel gears (10 and 11), and to allow the maximum amount of wear on the bearings before they need to be replaced.

Like any other type of bearing, if allowed to wear beyond normal limits or if used in severe service without any maintenance, the bearings may fail, which could alter the performance of the machine. Refer to page 8 – Nozzle Housing Assembly Removal. Subsequently, if the nozzle housing bearings need replacement, then the tee housing bearings will also need to be changed. Refer to page 10 – Tee Housing.

Cups: After extended use, the cups may show signs of wear from one of the seals (36 or 35) that has worn thru the jacket into the spring. Rotation of the nozzle housing or tee housing against the static seal can wear a groove into the cup. This groove will prevent proper sealing when a new seal has been installed. Replacement of the cup is recommended whenever visual grooves or wear marks are evident. (See *Disassembly Procedure* for removal).

Cups will also wear out from rotation against the bearings; however, often times the bearings can be changed two or three times before

the cups may need to be replaced. This is dependent on the type of cleaning solution, pressure and the regularity of inspection and preventative maintenance.

Rotor Shaft Bearings: The upper and lower bearings that support the rotor shaft can easily be inspected while the machine is fully assembled. To inspect the upper and lower rotor shaft bearings (47 and 46), remove the stator (7). Rotate the rotor shaft by turning the rotor (7) with your finger or a screwdriver. If the bearings allow side to side movement so that the rotor is contacting the inlet stem wall, then the bearings need to be replaced. Refer to **Disassembly Procedure** on page 8-10 and **Assembly Procedure** on page 10-12 for details on parts replacement.

Gearbox Bearings: There are six bearings inside the gearbox, which maintain the gear shaft alignment. Removal of the gearbox cover (2) and the geartrain allows for inspection of these bearings. If there is notable side to side play of one of the gear shafts (# 17, 18 or 20) and one of the mating bearings (# 26, 27, 28, 29, 30) then replacement is recommended. Refer to **Disassembly Procedure** on page 8-10 and **Assembly Procedure** on page 10-12 for details on parts replacement.

NOTE: While it may appear that the gearbox bearings are standard off-the-shelf bearings, they have all been modified by the manufacturer to meet the design specifications set forth by the manufacturer. Replacement of these bearings by any type other than Spraying Systems Co. parts can compromise the performance of the machine.

DISASSEMBLY PROCEDURE

During disassembly of Cloud-Sellers 360 series, several inspections can be made which aid in determining a preventative maintenance schedule or in troubleshooting, should there be a problem. If you have already disassembled a machine, read through the disassembly procedure then refer to the *Assembly Procedure* section beginning on page 10-12. Item numbers are shown in parentheses. A check mark √ precedes an inspection of a part or assembly. If upon your inspection you find something that differs from what is normal in a new part or assembly, make a note of it, and then continue the disassembly procedure. At the end of the disassembly, compare your notes to the troubleshooting guide at the back to find a solution.

STATOR (8) AND ROTOR (9) REMOVAL

With machine standing upright, remove stator retaining ring (39) with needle nose pliers. Lift out stator (8) with pliers or by hand.

- √ check to see that rotor shaft spins free: rotate the rotor shaft by turning the rotor with your finger or a screwdriver. It should spin freely with minimum pressure, and the tee housing (4) will spin slowly.
- √ check free play of tee housing up and down on the axis of the inlet stem (3). If there is no movement, there could be scale or deposits trapped between the main tee housing bearings and the bearing cups, or the unit has been assembled incorrectly. Take note if there is no free play and refer to the troubleshooting guide for assistance.

NOZZLE HOUSING ASSEMBLY (5) REMOVAL

- √ check the nozzle housing for free play (in and out) on the axis of the tee housing nose (4). If there is no movement, there could be scale or deposits trapped between the nozzle housing bearings and the bearing cups, or the unit has been assembled incorrectly. Take note if there is no free play and refer to the trouble shooting guide for assistance.

Nameplate Removal: the nameplate screws (58) with a 7/16" socket or end wrench. Grasp the nozzle housing assembly with one hand and gently pull off the tee housing (4). If the nozzle housing does not come off easily or if there was no free play, there may be deposits or scale built up between the cups (34) and the bearings (33). If so, use a plastic hammer to gently tap on the nozzle housing to loosen it, then remove from tee housing. The nameplate (6), outer bearing (33), and seal (36), will come off with the nozzle housing assembly. Remove the inside bearing and seal from the tee housing.

NOTE: Because the flange of the inside bearing is locked into the groove on the tee housing, it is necessary to rotate the bearing to loosen the flange. Use two (2) screwdrivers to gently pry up on the flange of the bearing until you can grasp it with your fingers.

Inspect the seals to be sure the jacket has not worn down thru to the spring.

- √ examine the bearings for wear. They should be free from cracks, grooves on the O.D and should fit inside a nozzle housing cup (34) with a minimum of side to side movement.
- √ inspect the inside of the cups for grooves or surface wear marks that could create a sealing problem.

Remove the bevel gear retaining ring (19); pry one of the ends out of the groove on the nozzle housing with a small screwdriver, working your way around until it is completely removed. Remove the bevel gear and the (49) o-ring.

- √ visually inspect the nozzles; look down the end of the nozzle with the aid of a flashlight to see that there is no blockage of the stream straightener.

Remove the nozzles for cleaning if necessary using a large adjustable wrench or a pipe wrench.

Bearing Cup Removal: Before removal of the bearing cups, the bevel gear (11) should be removed. Insert tool # T-1 thru the bearing cup on the bevel gear side of the nozzle housing at a slight angle. Then line up the stepped side of T-1 with the bottom end of the cup. Using an arbor press, support the nozzle housing and press out cup. Insert tool # T-1 and remove remaining bearing cup.

GEARBOX COVER (2) REMOVAL

Invert machine so that the gearbox cover (2) is facing up. Remove the 2 gearbox cover screws (56) and lockwashers (57). Insert a stiff blade putty knife between the gearbox (1) and gearbox cover (2); tap on the end with a small hammer, then pry up on gearbox cover until the o-ring (54) is visible. Slowly lift the gearbox cover while holding the idler shaft (17) which may be lifted with the gearbox cover due to suction of the lower idler shaft bearing (28).

If the idler shaft is pulled out with the gearbox cover, the idler gearsets may disengage from the rest of the geartrain. If this occurs, simply remove the loose gearsets after the oil has been drained from the

gearbox (1). When draining oil, be careful not to lose the 2 carbide thrust washers (23).

- √ visually inspect the gearbox cover o-ring (54) for swelling or cracking.
- √ inspect the idler shaft lower bearing (28) and the final shaft lower bearing (30) for wear on the flange surface thickness and the I.D.
- √ inspect the rotor shaft thrust bearing (26) for wear on the flange surface. If the flange thickness has worn down 50% to 1/32", then it must be replaced. Likewise if the I.D. has worn and the end of the rotor shaft has excessive side to side movement, then replacement is recommended.

Removal of 26, 28 and 30 Bearings: Using a ¼ - 28 or ¼ - 20 tap; insert into I.D. and screw down with tap wrench until bearing is forced up out of gearbox cover bore. Once the tap is bottomed out, use pliers to finish removing 26. If the tap does not force the bearing up after bottoming out in the casting bore, change to the next size of tap (5/16 - 18 or 5/16 - 24).

28 and 30: Using a 5/16 - 18 or 5/16 - 24 tap; insert into I.D. and screw down with tap wrench until bearing is forced up out of gearbox cover bore. Once the tap is bottomed out, use pliers to finish removal. If the tap does not force the bearing up after bottoming out in the gearbox cover casting bore, change to next size of tap (3/8 - 16 or 3/8 - 24).

GEARTRAIN REMOVAL

NOTE: the rotor must be removed prior to removal of the geartrain. Remove the rotor shaft assembly (26) and the rotor shaft spacer (42). Next, remove the idler gear shaft (17) and the 3 gearsets (23). The remaining final drive gear shaft assembly (18) and the 2 gearsets (23) can now be removed. A medium length screwdriver with the tip bent at 90 degrees can assist by prying up on the final shaft bearing retainer (15) while pulling on the final shaft (18) with your fingers. NOTE: Do not use pliers or vise grips to pull on the final drive shaft, as the shaft may be damaged.

- √ inspect the gearsets for wear on the teeth. Replace gearsets when teeth are worn down by approximately 20-25%.

NOTE: The lower idler gearsets (26) with the thrust washer and the rotor shaft pinion gear (16) will wear faster than the rest of the gearsets due to rotation speed. Compare gearsets to get an idea of the wear on the teeth.

- √ inspect the idler and final shafts for wear; look for obvious grooves or highly polished areas. Replace as necessary.
- √ inspect the gearset bearings by testing them on the idler or final shafts; if there is excessive side to side motion, then replacement of the gearset bearings is recommended.

NOTE: The idler gear bearing is not a replaceable spare part where oilite bearings are concerned (normally lubricated gearboxes only).

- √ inspect the rotor shaft assembly: check the pinion gear (16) for wear on the teeth. Inspect the chromium oxide coated surface for wear from the carbide bearings. If there are grooves or cracking evident, the rotor shaft assembly (21) may need to be replaced.

Final Drive Gear Shaft Disassembly: Replacing upper final shaft bearing (29): Using an arbor press; press the final shaft assembly (18) out of the bore of the final drive gear (25). Support the final drive gear and press on the final shaft. Remove the final shaft bearing retainer (15).

- √ inspect the o-ring (51) for cracks or swelling; replace as necessary.
- √ inspect the final drive bearing (29); the I.D. should spin freely on the larger diameter of the final shaft and pinion (18) with minimum of side to side motion. Replace the bearing if the flange thickness is less than 1/32" or if there is excessive side to side movement of the final shaft.

Remove the final shaft upper bearing (29) and final shaft seal (38), using tool #T-7 from the tool kit. Support final shaft bearing retainer (15) in an arbor press, and press out bearing and seal. The seal will be damaged in the process and should be discarded and replaced.

GEARBOX DISASSEMBLY

Remove 3 gearbox bolts (40) with a 3/8" deep socket. Remove the three lockwashers (41). The gearbox (1) can now be removed from the inlet stem (3). If the gearbox (1) does not come off easily, there may be deposits or scale built up between the inlet stem (3) and the gearbox (1). Insert a medium screwdriver between the gearbox and the tee housing (4) to pry the gearbox loose from the inlet stem.

- √ inspect the gearbox stem o-ring (53) for cracks or swelling, replace as necessary.

Remove the upper rotor shaft bearing (47) or (47) with pliers.

- √ inspect the upper rotor shaft bearing (47) for cracks in the carbide insert, or for obvious wear marks. Check the fit of the upper rotor shaft bearing (47) over a rotor shaft for proper bearing clearance.
- √ check for wear on the 52 spring seal (lubricated gearboxes with 47) and replace if worn.
- √ inspect the upper idler shaft bearing (27) for excessive side to side play.

Bearing 27 Removal: Using a 5/16 - 18 or 5/16 - 24 tap; insert into I.D. and screw down with tap wrench until bearing is forced up out of the gearbox bore. If the tap does not force the bearing up after bottoming out in the casting bore, change to the next size of tap (3/8 - 16 or 3/8 - 24).

Bearing 46, 14 and 45 Removal: Remove the lower rotor shaft bearing (46) and the rotor shaft seal housing (14) from the gearbox by using tool # T-4. With gearbox upright, insert T-4 through bore that housed the upper rotor shaft bearing (47), and either strike T-4 with a hammer, or use an arbor press. The seal housing spacer (45) protects the rotor shaft seals (52) from being damaged during disassembly.

TEE HOUSING AND INLET STEM

Remove ring gear retaining ring (20) with a small screwdriver. Lift out ring gear (12) and bevel gear (10) with your fingers. The tee housing can now be lifted off of the inlet stem (3).

- √ check the seals (35) to be sure the jacket has not worn down thru to the spring.
- √ examine the bearings (35) for wear. They should be free

from cracks, grooves on the O.D and should fit inside a tee housing cup (32) with a minimum of side to side movement.

- √ inspect the inside of the cups (32) for grooves or surface wear marks that could create a sealing problem.
- √ inspect the inlet stem (3) for grooves worn in casting that could prevent proper sealing.

Bearing Cup Removal: Insert tool # T-2 inside of tee housing and line up stepped side of tool with the bottom end of one of the cups. Using an arbor press, support the tee housing and press out cup. Repeat procedure with remaining cup.

ASSEMBLY PROCEDURE

INLET STEM ASSEMBLY

Stand up inlet stem (3) in inverted position (3 bolt holes facing up). Check to see that the three 5/16 - 18 bolt holes are free of oil or water. Install upper tee housing bearing (31); be sure to line up tab of bearing in notch of inlet stem so that the bearing flange sits flat on the machined surface of the inlet stem. Carefully install the tee housing seal (35) with the spring facing up towards the 4 ports in the inlet stem. See Photo # 1 on page 15.

In cold temperatures, it is recommended that the seals be heated slightly in warm water, so that they will fit over the inlet stem O.D. easily. It is recommended that bearings and seals always be changed in pairs.

TEE HOUSING ASSEMBLY

Lubricate cup O.D. with a small amount of food grade gearbox oil. Using tool # T-3 and an arbor press, press cup down into tee housing until the flange is seated flat on the tee housing. Repeat procedure for other cup.

Wipe a small amount of food grade gearbox oil on I.D. of bearing cups. This reduces the initial friction between the seals and cups. Invert tee housing and place over bearing and seal on inlet stem.

Install lower seal, spring facing down towards the ports in the inlet stem. Next, place the lower 31 bearing over the inlet stem with the tab facing up.

Place tee housing bevel gear (10) on bearing. Line up notch on the I.D. of the bevel gear with the tab on the bearing as shown in the photo # 2. Rotate the bevel gear (10) and the bearing (31) until the notch on the bevel gear lines up with the locator mark on the inlet stem. The assembly should match the photo # 2 at this point. Line up notch of ring gear (see photo # 4) with drive lug on 5 tee housing (see photo # 2).

Install the ring gear retaining ring (20); place one end into groove in tee housing, then work the ring into the groove and press into place with a small screwdriver. Be sure the retaining ring is completely seated in the tee housing groove.

Place the 3 gearbox bolt o-rings (52) into the counter bores of the inlet stem. Lubricate the o-rings and the 1" bore of the inlet stem with gearbox oil. This will prevent twisting of o-rings during assembly.

GEARBOX ASSEMBLY

Install a new o-ring (55) on the upper rotor shaft bearing housing (47). Place the (47) into the top end of the gearbox (1). Install a new o-ring (53) on the gearbox, using a small amount of oil for lubrication.

NOTE: Flow-thru machines do not have a seal protector (45), or a seal retainer (14) which has 2 (50) o-rings and 2 (52) seals.

For Lubricated Gearboxes: Invert the gearbox, and place the seal protector (45) into the center bore of the gearbox. Install two (2) new rotor shaft seals (37) and o-rings (50) on the seal retainer (14). Lubricate the o-rings and the bore of the gearbox, then place the seal retainer into the gearbox until it is seated against the seal protector.

Installation of Center Rotor Shaft Bearing (46): Replace o-ring (50), and lubricate with oil. Place lower rotor shaft bearing (46) into center bore of gearbox; and line up the flat on the flange with the large bore in the gearbox. This is important to prevent interference with the geartrain. Press down with your fingers until (50) o-ring is seated. Place tool # T-5 with a 12 oz. hammer or use an arbor press to seat the flange of the lower rotor shaft bearing is against the gearbox bore face.

IMPORTANT NOTE: In order to maintain proper alignment between the upper and center rotor shaft bearings, the flange of the lower rotor shaft bearing (46) must be completely seated against the face of gearbox (1) bore.

Inspection of Bearing Alignment: Place the #T-8 seal protector over the end of the rotor shaft assembly (21), and insert the rotor shaft thru the upper (47) and lower (46) rotor shaft bearings. The rotor shaft should spin freely; if there is resistance, it is probably because the flange of the lower rotor shaft bearing is not completely seated against the gearbox. Reseat the lower rotor shaft bearing (46) with the tool # T-5, and test the alignment once again.

ASSEMBLY OF GEARBOX TO INLET STEM

Check to see that the three 5/16 - 18 bolt holes in the inlet stem (3) are free of oil or water. Invert the gearbox and line up the tab on the gearbox (see photo # 3) with the notch on the bevel gear (10). Once the tab and notch are engaged, the gearbox can be rotated if necessary to line up the bolt holes. If the bevel gear (10) is aligned properly with the locator mark on the inlet stem, the gearbox bolt holes will be lined up with the inlet stem bolt holes. Refer to photo # 2. Apply a small amount of anti-seize compound to the threads of the bolts. Install the 3 gearbox bolts with lockwashers. Hand tighten bolts, then torque to 30ft/lbs for Stainless Steel, 23 ft/lbs for Bronze. If you do not have a torque wrench, tighten the bolts until snug. Do not overtighten.

GEARTRAIN ASSEMBLY

Final Drive Gear Shaft Subassembly:

1. Install the final shaft seal (38) into the final shaft bearing retainer (15) with the spring facing upwards. Using an arbor press, press the final shaft upper bearing (29) into the final shaft bearing retainer (15).

   NOTE: the flow-thru type gearbox does not use the final shaft seal (38).

2. Align the square drive of the final drive shaft (18) with the square of the final drive gear (25). Press the drive gear onto the shaft using an arbor press.
3. Install a new o-ring (51) on the final shaft bearing retainer.
4. Install the two gearsets on the shaft according to the type of gear ratio. Refer to photos # 5, 6, and 7. Be certain that the (23) gearset with the undercut for the thrust washer (24) is on the bottom end of the shaft, facing the gearbox cover (2).

Idler Gear Shaft Assembly: Place the 3 gearsets on the idler shaft (17) in the proper order according to the type of gear ratio. Refer to photos # 5, 6, and 7. Be certain that the (23) gearset with the undercut for the thrust washer (24) is on the bottom end of the shaft, facing the gearbox cover (2).

Lubricate the (51) o-ring with gearbox oil. Place the final drive gear shaft subassembly (18) into the gearbox and seat the shaft by pressing down on the gearsets. Hold the idler gear shaft subassembly (17) in your right hand and place into the gearbox next to the idler shaft upper bearing (27). With your left hand holding the idler shaft, move the subassembly over until the idler shaft (17) drops into the idler shaft upper bearing (27). Rotate the gearsets with the right hand to assist in meshing with the gearsets on the final shaft (18). Press down on the idler shaft to be certain that it is seated (see Photo # 8). Place the 2 thrust washers (24) with the lapped side facing up (towards the gearbox cover bearings). ***NOTE: the thrust washers (24) are lapped on one side only.***

Place the rotor shaft spacer (42) on the rotor shaft (21). Place tool # T-8 seal protector on the rotor shaft end. This tool protects the rotor shaft seals from damage during installation of rotor shaft. Push rotor shaft thru lower rotor shaft bearing until pinion gear engages with (21) gearset. Remove the T-8 seal protector from the rotor shaft. Rotate the rotor shaft to be certain that all of the gears are properly engaged, and the rotor shaft bearings are aligned.

NOTE: Flow-thru machines do not have rotor shaft seals and therefore you do not need to use tool # T-8 seal protector when installing the rotor shaft assembly.

Gearbox Lubrication: Fill the gearbox with oil. The oil level should just cover the (21) gearset on the final shaft (18) as shown in photo # 8.

All Lubricated machines are supplied with the following type of oil:

OIL TYPE: Food Grade U.S.D.A Acceptable H-1
QTY: 14 oz. (414 ml.) S.A.E.-90

Note: Flow-thru machines do not have oil in the gearbox, they are lubricated by the cleaning solution.

Oil Alternatives: For non-food industry applications, H-2 lubricants can be used such as Keystone Keygear 90, KLC-20/50 or KSL-365. Lightweight gear oils SAE 50-90 are also suitable. It should be noted that heavy weight (140) gear oils or greases will alter the performance of the machine regarding cycle times.

GEARBOX COVER ASSEMBLY

Use tool # T-6 to press the rotor shaft thrust bearing (21) into the center bore of the gearbox cover (2). Use tool # T-5 to press the idler shaft lower bearing (28) and the final shaft lower bearing (30) into their respective bores (refer to exploded view). Install a new o-ring (54) with lubricant.

Lubricate the bore of the gearbox and the gearbox cover o-ring with gearbox oil. Align the gearbox cover with the shafts (# 17, 18, 21) and the dowel pin hole in the gearbox. Press down until o-ring is seated. Install split washers (57) and gearbox cover screws (56). Torque screws to 100 in/lbs for Stainless Steel and 80 in/lbs for Bronze. Do not overtighten.

ROTOR INSTALLATION

Turn machine right side up. Place rotor (9) on rotor shaft (21). Install lockwasher (57) and rotor nut (59). Tighten the nut while holding pressure against the rotor with a medium sized screwdriver wedged between the inlet stem and the rotor or use needle nose pliers to hold a fin on the rotor. Torque the rotor nut to 100 in/lbs for Stainless Steel and 80 in/lbs for Bronze. Be certain the rotor nut is tight, and that the rotor shaft is not rotating while tightening the nut. Rotate the rotor (9) with your finger or a small screwdriver. The rotor should rotate freely and the tee housing should begin to move slowly.

NOZZLE HOUSING ASSEMBLY

Bearing Cup Installation: Lubricate cup O.D. with a small amount of food grade gearbox oil. Using tool # T-3 and an arbor press, press cup down into nozzle housing until the flange is seated flat on the nozzle housing. Repeat procedure for other cup.

Bevel Gear Installation: Clutch Drive: Wipe a small amount of gearbox oil into the groove of the nozzle housing (5). Install a new o-ring (49). Place the nozzle housing bevel (11) on the nozzle housing. Install the bevel gear retaining ring (19) with a small screwdriver, be sure the retaining ring is completely seated in the groove of the nozzle housing.

Pin Drive: Place the bevel gear dowel pin (44) into the hole in the nozzle housing. Install a new o-ring (49). Line up the slot on the bevel gear with the pin, then install the bevel gear retaining (19) with a small screwdriver, be sure the retaining ring is completely seated in the groove of the nozzle housing.

Nozzles and Stream Straighteners: Tap stream straightener into nozzle with plastic faced hammer. Place a small amount of anti-seize compound or Teflon tape on the threads and the radius on the end of the nozzle. Insert the nozzle (7) into nozzle housing (5) and tighten with open end wrench or adjustable wrench.

NOZZLE HOUSING TO TEE HOUSING ASSEMBLY

1. Place one of the nozzle housing bearings (33) over the nose of the tee housing (4), align the locator marks on the tee housing casting and the back of the bearing (refer to photo #'s 9 & 10). This will allow the bearing to fit flush against the tee housing. Rotate the bearing slightly and it will lock into place against the ridge cast into the tee housing.
2. Install one of the nozzle housing seals (50), the spring side facing outward towards the ports in the tee housing.
3. Wipe a small amount of gearbox oil on the I.D. of the bearing cups (34) in the nozzle housing (5). This reduces the initial friction between the seals and cups.
4. Place the nozzle housing assembly (5) over the seal and bearing on the tee housing.

Nameplate, Bearing & Seal Installation:

1. Install the outer seal (36), with the spring facing inward toward the ports in the tee housing.
2. Align the locator mark on the nozzle housing bearing (33) with the dot on the nameplate (6). See Photo #10. Push the bearing into the nameplate so that the flange of the bearing is seated against the nameplate. Install the nameplate and bearing onto the tee housing nose, check that the name is right side up.
3. Install the nameplate screws (58) and the lockwashers (57). Torque screws to 100 in/lbs for Stainless Steel and 80 in/lbs for Bronze. Do not overtighten.

FINAL INSPECTION

1. Check for end play (in and out) of nozzle housing on the axis of the tee housing nose. There should be some free play.
2. Check end play (up and down) of tee housing.
3. Rotate the rotor with your finger or a small screwdriver. The rotor should rotate freely and the tee housing should begin to move slowly.

NOTE: If you get negative results on any of these final inspections then refer to the Trouble Shooting Guide that begins on page 13.

STATOR INSTALLATION

Place the stator (8) into the inlet stem (3) by rotating slightly until the weld on the I.D. of the inlet stem is in between 2 of the fins of the stator. The weld on the inlet stem keeps the stator from rotating. The stator retaining ring (39) can now be installed using a pair of needle nose pliers.

TROUBLESHOOTING GUIDE

This section lists common problems that may be encountered during the operation of Cloud-Sellers® series. Proper operating environment and preventative maintenance can prevent many problems. A brief explanation of the problem & solution is followed by directions of where to look in the Operation & Maintenance Manual for further assistance or explanation.

PROBLEM	SOLUTION
Excessive Tee-housing bearings wear	Visually inspect the bearing for cracks or signs of corrosion. Check the bearing clearance between the I.D. of the cup (31 & 33) and the O.D. of the bearing. If the bearings show signs of wear from deposits, sediment or other foreign matter, or have excessive side to side movement in the bearing cup, replacement is recommended.
Excessive gearbox bearing wear	If there is excessive side to side play of one of the gear shafts (17, 18, and 21) and one of the mating bearings (26, 27, 28, 29, and 30) then replacements is recommended.
Poor cleaning performance	Water Pressure & Flow: Is there sufficient pump pressure or water flow at the tank cleaner? Minimum operating pressure is 30-40 psi measured at the inlet of the machine. Minimum pipe or hose diameter is 1 ½" I.D. Nozzle Housing Rotates Slow or Not At All: Upon inspection of the nozzle housing bearings (33), is there a buildup of deposits, sand or scale? Inspect the seals (36) for signs of wear. Replace bearings, cups and seals as necessary. If the nozzle housing cups, bearings and seals need replacement or cleaning, it follows that the tee housing cups, bearings and seals will also need the same.
Erratic rotation of nozzle housing	If you are able to observe the machine in operation and notice the nozzle housing rotating, then stopping briefly, then rotating again, this could be symptoms of the following: • Clutch o-ring is worn or corroded and is not seating completely against the nozzle housing bevel gear. • Damaged bevel gears (10, 11): inspect the bevel gears for bent or excessively worn teeth. If the teeth are worn down approximately 25%, or if one or more teeth are bent, then the bevel gear(s) should be replaced.
Worn clutch o-ring	Inspect the clutch o-ring (49) condition. If the clutch o-ring is cracked, or if corrosion has shrunken it in size and it is not filling the o-ring groove on the nozzle housing completely, then replacement is recommended.
Nozzles clogged	Inspect the nozzles for obstructions by solid particles trapped in the stream straighteners (13). Use Teflon tape on nozzle threads prior to re-assembly.

PROBLEM	SOLUTION
Machine configuration & cycle time (Inadequate cleaning)	Verify that the rotor/stator combination, nozzle size & gear ratio are configured properly for the type of cleaning required. Contact your local distributor or representative for further recommendations.
Cleaning solution composition & temperature (Cleaning and wear problems)	Check to see that the proper concentration and type of chemicals is being used for the material being cleaned, and that the solution is heated to the proper temperature.
Loose rotor nut	Check to see that the rotor retaining nut (59) is properly tightened on the rotor shaft. If the rotor nut is loose, the rotor may be rotating on the shaft, instead of rotating the rotor shaft through the geartrain. Tighten the rotor nut as described in the Rotor Installation. Torque setting should be 100 in/lbs.
Rotor shaft difficult to turn	• Misalignment of the carbide rotor shaft bearings (46, 47) can prevent smooth rotation. Rotate rotor shaft bearing with Tool # T-5, then check the alignment once again. • Foreign material jammed in geartrain. Remove gearbox cover (2) for inspection. Remove foreign material, reassemble geartrain and install gearbox cover (2) as described.
Rotot shaft turns, but the tee housing does not	This is an indication of possible geartrain malfunction. If the rotor shaft pinion gear or any of the gearsets (23) are worn out, then the tee housing will not rotate. Remove gearbox cover (2) for inspection, replace worn gears as necessary.
Deposits, scale, foreign material in the tee housing bearings	• Inspect the seals (35) for signs of wear. If they are worn out, they will allow particles in the cleaning solution in between the cups and bearings, which will alter the performance of the machine. Replace bearings, cups and seals as necessary. • Install an inline strainer to filter out sediment in the cleaning solution.
Erratic rotation of tee-housing	If you are able to observe the machine in operation and notice the tee housing rotating, then stopping briefly, then rotating again, this could be due to improperly installed ring gear. The ring gear notch (see photo # 4, page 16) must be locked into the tee housing tab (photo # 3, page 16).
Clogged stator or rotor	Remove stator retaining ring (39) and lift out stator (8). Remove any foreign objects from the stator or rotor that could be altering the normal flow of cleaning solution.
Excessive water leakage	In the CIP version of Cloud-Sellers® 360 series, some water leakage at the gap between the tee housing & gearbox and at the gap between the nozzle housing & tee housing is normal. There are two small holes in the tee housing that rinse the bevel gears, ring gear and the inside of several of the castings to prevent a buildup of deposits or sediment that could promote bacteriological growth.
Worn tee-housing seals	If Cloud-Sellers 360 series is allowed to operate for a prolonged period of time after the seals have worn out, foreign particles will lodge between the inlet stem and the tee housing bearings and cups and cause abrasive wear on these parts. Corrosive chemicals can also have an effect on the sealing effectiveness. If the grooves or corrosion is severe, even new seals will not seal completely due to the uneven sealing surface. Excessive water leakage at the top and bottom of the tee housing indicates a sealing problem which can be caused by: • Seals worn out; no longer functioning properly. Replace worn seals. • Seals improperly installed. The spring side of the seal (the open section of the seal) faces the ports on the inlet stem. • Inlet Stem (3) casting or tee housing cups (32) have wear grooves which prevent the seals from sealing. Replace the cups. Reassemble the machine and then check for excessive leakage. If there is still excessive leakage after installing new cups and seals, the inlet stem may have to be replaced.

PROBLEM	SOLUTION
Worn nozzle housing seals	Excessive water leakage around the nozzle housing indicates a sealing problem which can be caused by: • Seals worn out; no longer functioning properly. Replace worn seals. • Seals improperly installed. The spring side of the seal (the open section of the seal) faces the ports on the nose of the tee housing. • Tee housing (4) or nozzle housing cups (32) has wear grooves which prevent the seals from sealing. Replace the cups. Reassemble the machine and then check for excessive leakage. If there is still excessive leakage after installing new cups and seals, the tee housing may have to be replaced.
No nozzle housing free play	If there is no free play (in and out movement) of the nozzle housing (5) on the axis of the tee housing (4) check one of the following: • Scale or deposit buildup between nozzle housing cups (34) and bearings (33). Remove the nozzle housing assembly (5) from the tee housing (4). Inspect the bearings (33) and cups (34) for deposits and / or scale buildup. Remove the scale or deposit buildup from the cups and bearings. Inspect the nozzle housing seals (36) for wear, replace as necessary, and then reassemble the nozzle housing to the tee housing. Assembly Nozzle Housing to Tee Housing. Inspect once again for free play. • Improperly assembled: remove the nozzle housing assembly (5) from the tee housing (4). Inspect the nozzle housing bearing (33) that is seated against the tee housing. Refer to Assembly Procedure; Assembly Nozzle Housing to Tee Housing.
No tee-housing free play	If there is no free play (up and down movement) of the tee housing (4) check one of the following: • Scale or deposit buildup between tee housing cups (32) and bearings (31). Inspect the nozzle housing bearings and cups as described above for deposits and/or scale buildup. If the nozzle housing bearings and cups are in need of cleaning or replacement, the tee housing bearings (31) and cups (32) will also need the same. Inspect the tee housing seals (35) for wear, replace if necessary. Reassemble and test for free play once again. • Improperly assembled: dismantle machine and note whether the ring gear (12) or bevel gear (10) are properly assembled in the tee housing. Inspect to see that the upper (31) bearing flange is seated flush against the inlet stem. Reassemble the machine as described in the Assembly Procedure.

WARRANTY

For newly purchased units the warranty is 18 months from the date of shipment or 12 months from the date of installation, whichever occurs first. This warranty includes manufacturing defects but does not cover the wear parts that include the o-rings, seal and bushings. This warranty will be void if parts other than those supplied by Spraying System Co. are used.

PRODUCT VIEWS

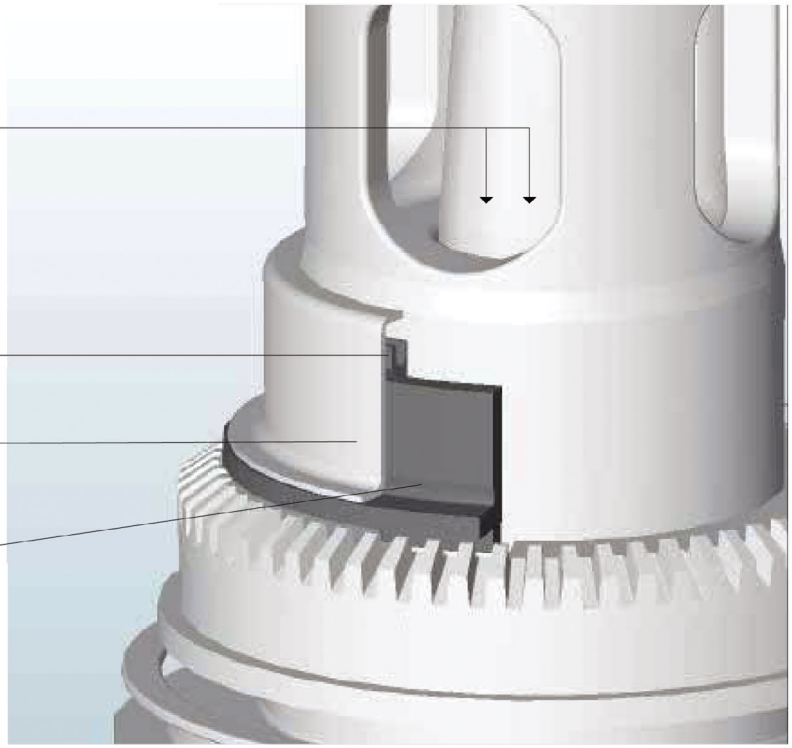

Photo 1
CUTAWAY VIEW OF SEALS, CUPS, BEARING

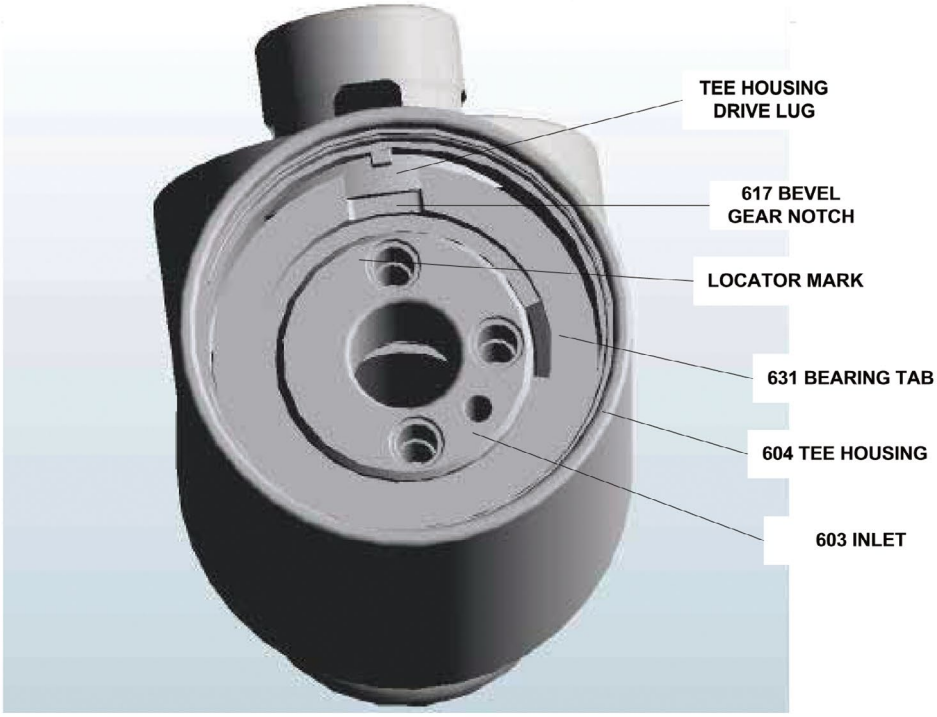

Photo 2
TEE HOUSING ASSEMBLY

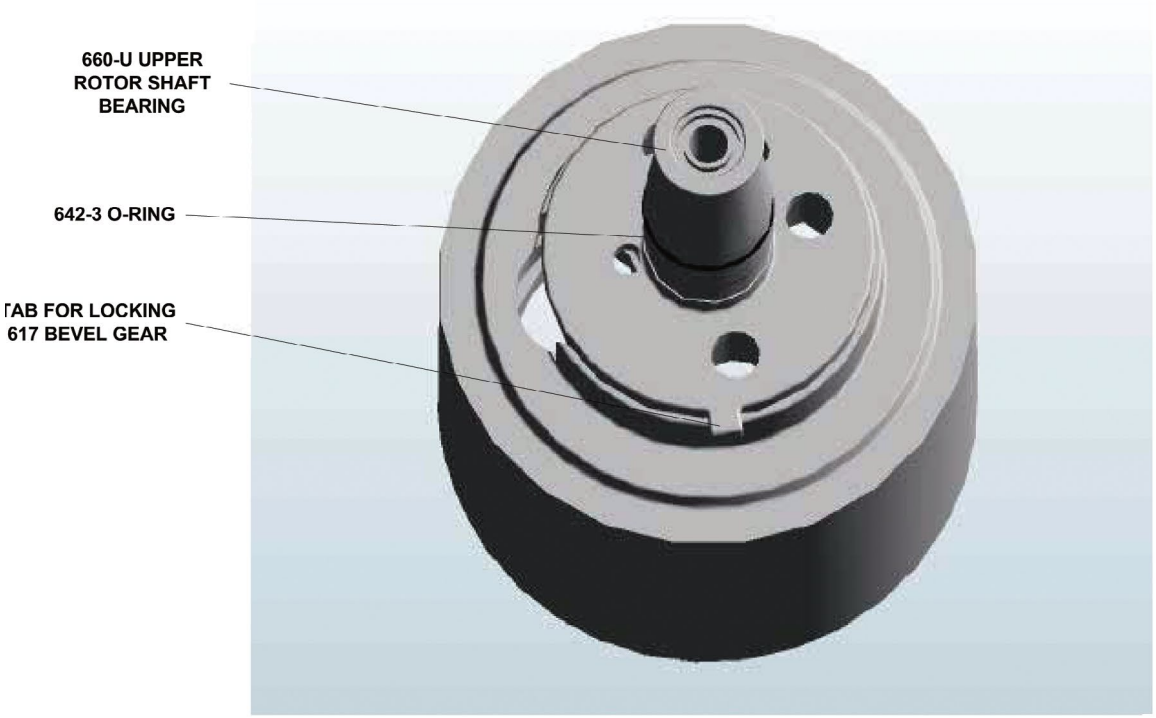

Photo 3
GEARBOX

Photo 4
RING GEAR

Photo 5
GEARSETS

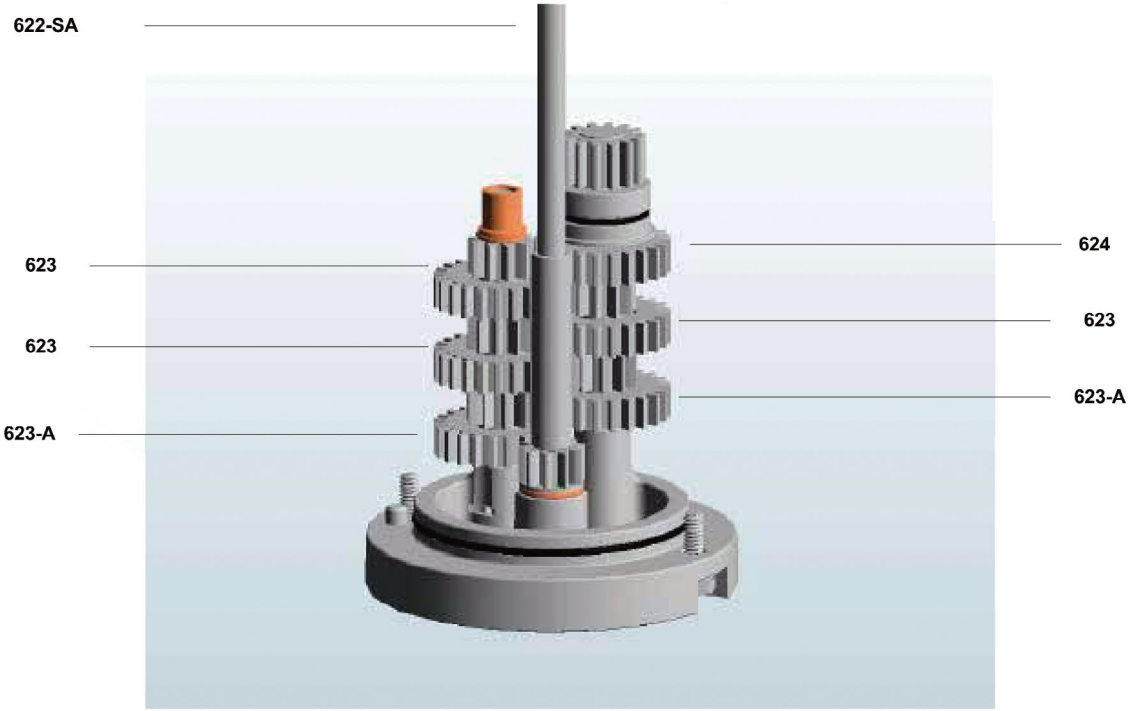

Photo 6
655:1 GEAR RATIO

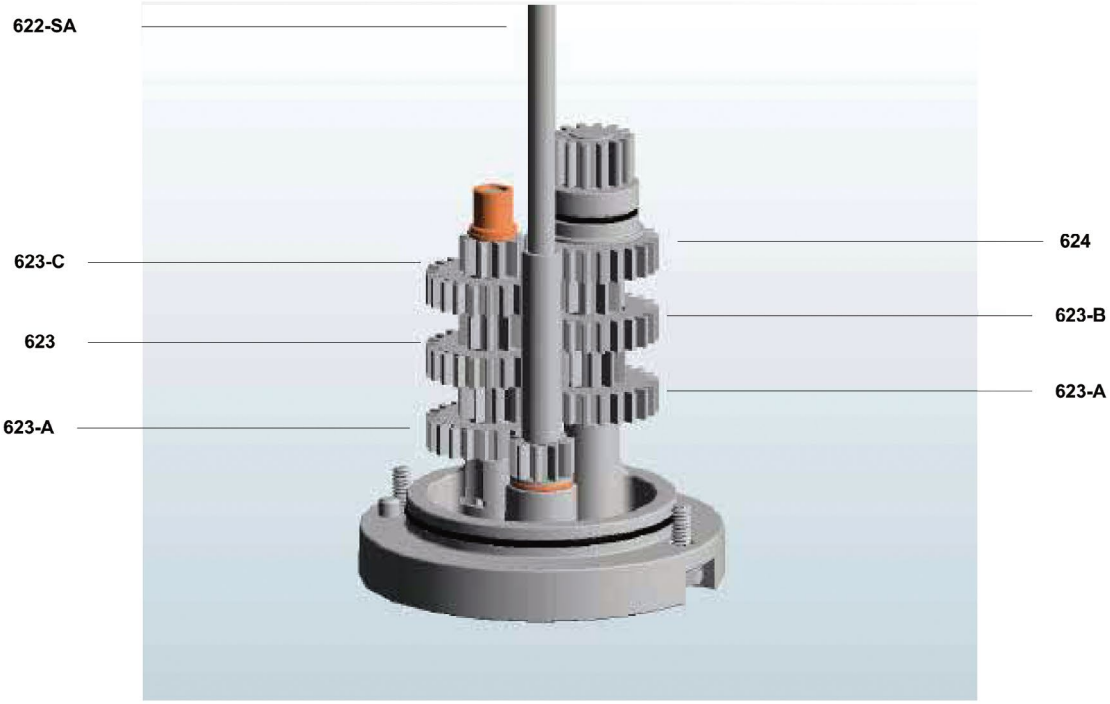

Photo 7
273:1 GEAR RATIO

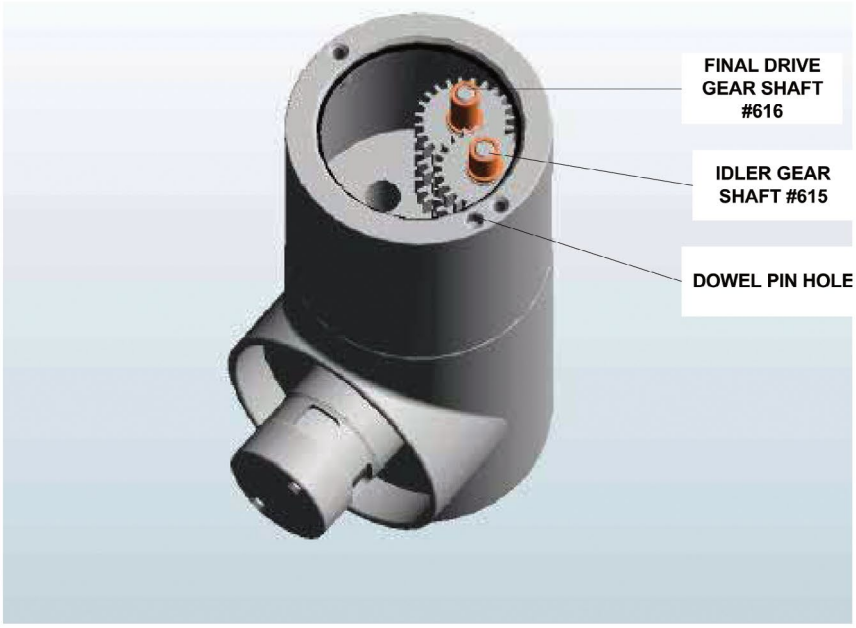

Photo 8
SEATING GEAR SHAFTS

Photo 9
BEARING LOCATOR MARK

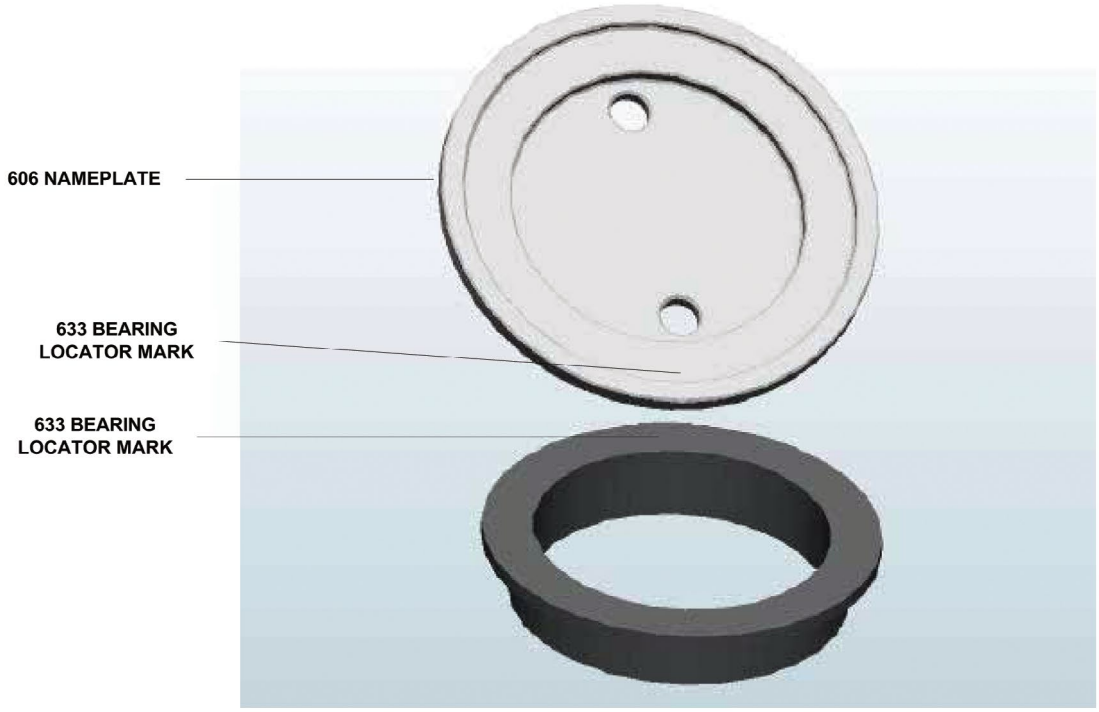

Photo 10
BEARING LOCATOR MARK
ALIGNMENT

CLOUD-SELLERS® 360 WITH TWO NOZZLE HUB

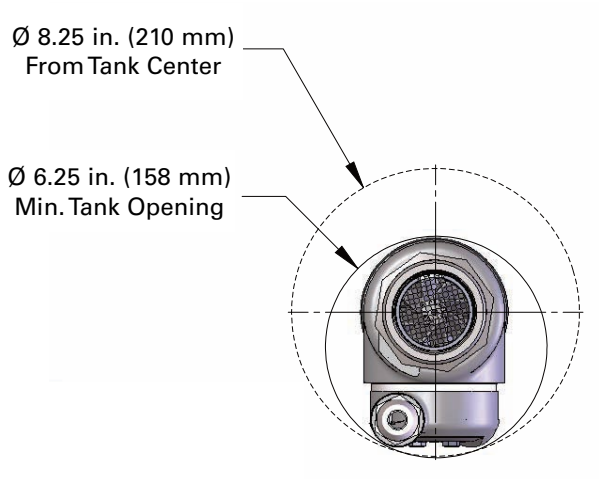

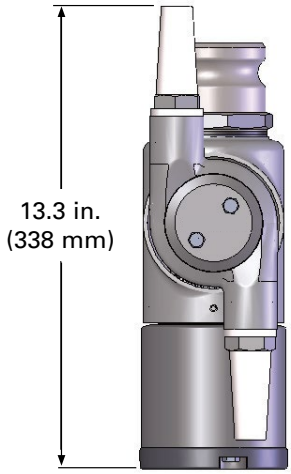

CLOUD-SELLERS 360 WITH THREE NOZZLE HUB

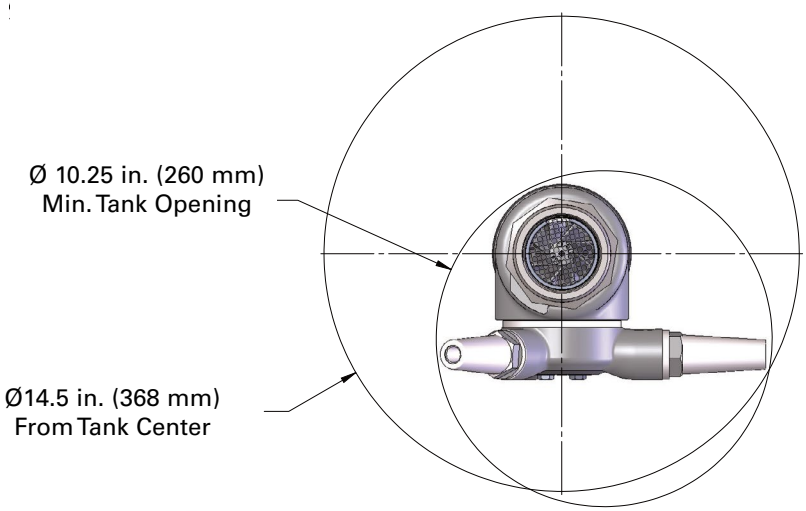

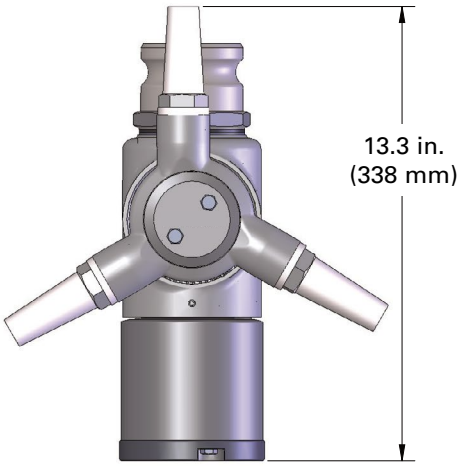

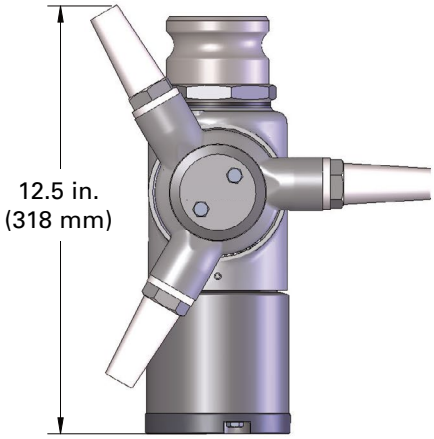

CLOUD-SELLERS® 360 SELF-RINSING WITH TWO & THREE NOZZLE HUB

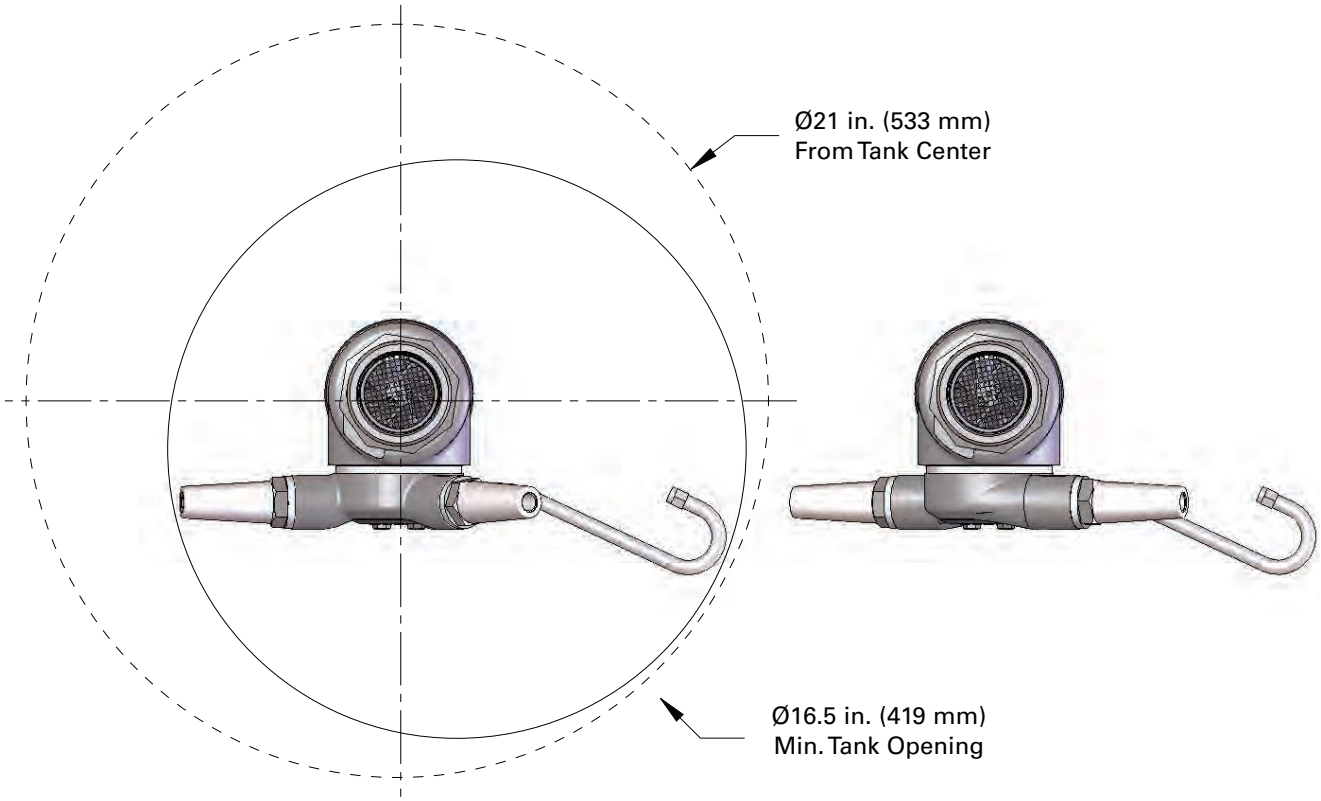

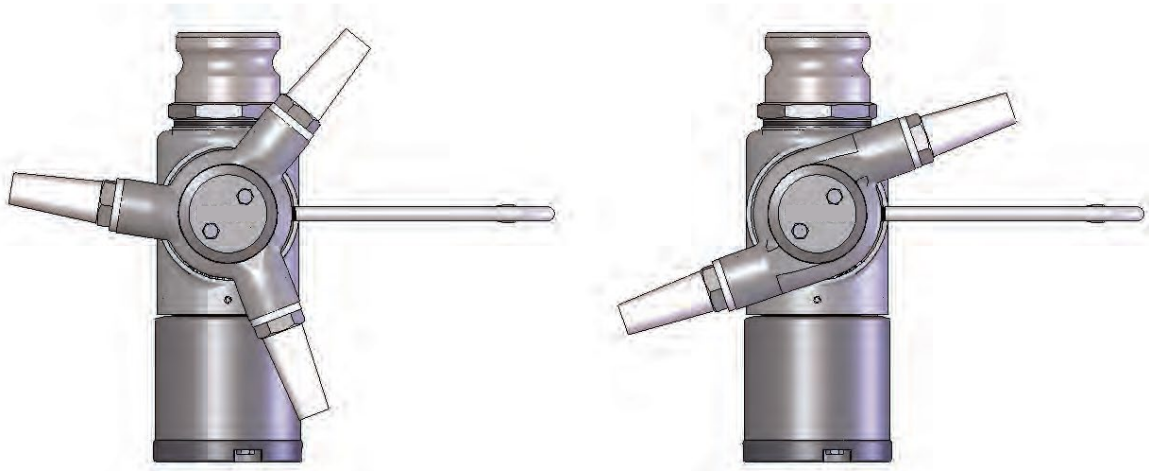

CLOUD-SELLERS® 180 THREE NOZZLE HUB

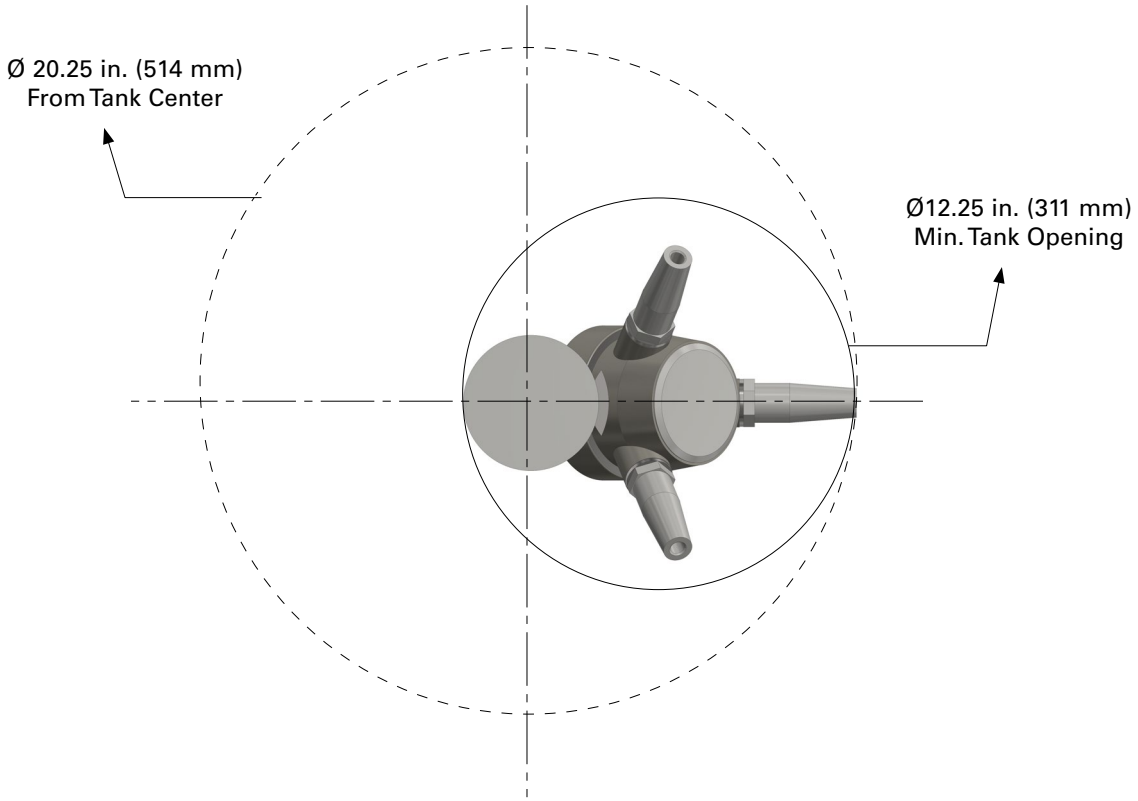

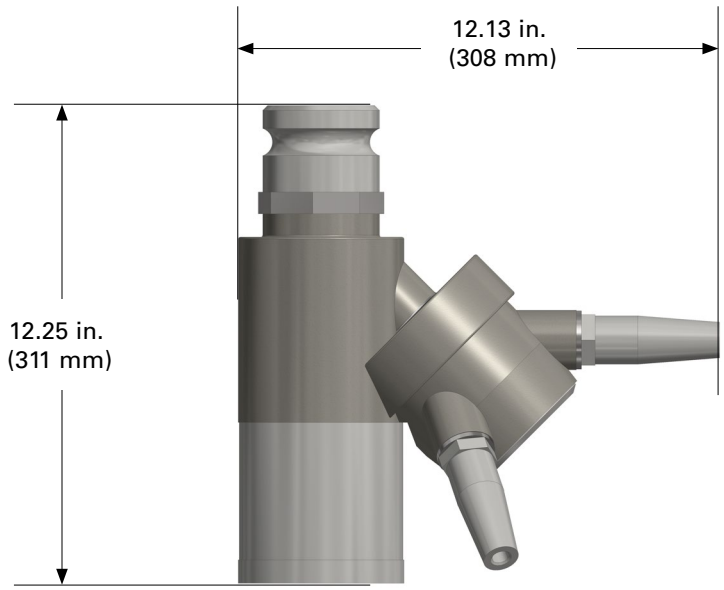

TJ360-2-600-D11-V1_

Model Type
180 Degrees Down= 180
Full 360 Degrees Coverage= 360
Full 360 Degrees Coverage (Low Flow)= 363

Number of Nozzles
For 360 & 363 = 2
For 180, 360 & 363 = 3

Gear Ratio
655:1= 6
273:1= 2

Rotor Type
Standard= 0
* Full= F

Stator Type
Standard= 0
Low Pressure= 1
Modified Low Pressure= 2
High Pressure= 3
High Volume= 4
*55 Degree= 5

Nozzle Size
* .250= A
.281= B
.313= C
.375= D
.438= E
.500= F
.563= G
.625= H
* .218= U
* .187= V
* .172= W
* .162= X
* .156= Y
* .125= Z

Nozzle Hub Drive
1 = Clutch
2 = Pin
3 = Clutch + Self Rinse
4 = Pin + Self Rinse

Gearbox Type
1 =Sealed
2 =Sealed + CIP
3 =Flow-Thru
4 =Flow-Thru + CIP

O-Ring Type
V =Viton
E =Ethylene Propylene

Gearbox Bearings
1 =Oilite(Sealed & Lubricated version only)
2 =Rulon LR(Flow-Thru version only)

Inlet Stem
Blank =2.5" Q.D. (M) and 2" NPT (F)
B =2.5" Q.D. (M) and 2" BSPT (F)
M =2.5'' Fire Hose (M) and 2" NPT (F)

NOTES

Unless Otherwise Specified:

"Q.D" in the inlet stem options refers to quick disconnect
Oilite Bronze bearings in sealed units
Food grade oil in sealed gearboxes
PTFE bearings in flow-thru gearbox

CIP units include:

Rinse holes in tee housing ring gear with cip slots

Flow-Thru units include:

Flow-thru gearbox
Flow-thru gearbox cover
Flow-thru inlet stem
PTFE gear train bearings

*** 363 Model Type:**

* Only Rotor type is "F" Full
* Only Stator type is "5" 55°
* Only Nozzle options are: "A,U,V,W,X,Y, Z"

Note:

This part number along with all orders will be handled through Spray Pro Express.

DESCRIPTION:
No. TJ180, TJ360 or TJ363 TankJet®
Ordering Information

Spraying Systems Co.®
Spray Nozzles and Accessories
P.O. Box 7900 - Wheaton, IL 60187-7901

REVISION NO. 2	Data Sheet No. 58790
REFERENCE:	SHEET: OF / DWG SIZE: B

©Spraying Systems Co.

EXPLODED VIEW AND PARTS LIST

#TJ___-_-___-___-___ TANKJET ASSEMBLY			
ITEM NO.	DESCRIPTION	QTY. 360	QTY. 363
1	GEARBOX	1	1
2	GEARBOX COVER	1	1
3A	INLET STEM–2 1/2" QC x 2" NPT	1	0
3B	INLET STEM–2 1/2" QC x 2" BSPT		
3C	INLET STEM–O.D. THDS, 2" NPT		
3D	INLET STEM–O.D. THDS, 2" BSPT		
3E	INLET STEM–2 1/2" QC x 2" NPT	0	1
3F	INLET STEM–2 1/2" QC x 2" BSPT		
4	TEE HOUSING	1	1
5A	NOZZLE HOUSING–DUAL CLUTCH	1	1
5B	NOZZLE HOUSING–DUAL PIN DRIVE		0
5C	NOZZLE HOUSING–TRIPLE CLUTCH		0
5D	NOZZLE HOUSING–TRIPLE PIN DRIVE		0
6	NAME PLATE	1	1
7A	NOZZLES – .250 (1/4") (WITH STREAM STRAIGHTENER)	2 OR 3	2
7B	NOZZLES – .281 (9/32")		0
7C	NOZZLES – .313 (5/16")		
7D	NOZZLES – .375 (3/8")		
7E	NOZZLES – .438 (7/16")		
7F	NOZZLES – .500 (1/2")		
7G	NOZZLES – .563 (9/16")		
7H	NOZZLES – .625 (5/8")		
7U	NOZZLES – .218 (7/32")	0	2
7V	NOZZLES – .187 (3/16")		
7W	NOZZLES – .172 (11/64")		
7Y	NOZZLES – .156 (5/62")		
7Z	NOZZLES – .125 (1/8")		
8	STATOR	0 OR 1	1
9	ROTOR–STANDARD – 0	1	1
10	TEE HOUSING BEVEL GEAR	1	1
11	NOZZLE HOUSING BEVEL GEAR	1	1
12	RING GEAR	1	1
13	STREAM STRAIGHTENER (INCLUDED IN NOZZLES)	2	2
14	ROTOR SHAFT SEAL HOUSING	1	1
15	FINAL SHAFT BEARING RETAINER	1	1
16	ROTOR SHAFT PINION GEAR SUB–ASSY (174SS & TUNGSTEN CARBIDE)	1	1
17	IDLER SHAFT (CHROME PLATE)	1	1
18	FINAL SHAFT AND PINION ASSSEMBLY	1	1
19	BEVEL GEAR SNAP RING	1	1
20	RING GEAR RETAINING RING	1	1
21	ROTOR SHAFT ASSEMBLY (INCLUDED ITEM NO. 16)	1	1
22	IDLER GEAR – 10T/24T LOWER	SEE GEARSET TABULATION	
23	IDLER GEAR – 10T/24T UPPER		

#TJ___-_-___-___-___ TANKJET ASSEMBLY			
ITEM NO.	DESCRIPTION	QTY. 360	QTY. 363
24	IDLER GEAR THRUST WASHER	2	2
25	24T FINAL SHAFT DRIVE GEAR	1	1
26	ROTOR SHAFT THRUST BEARING	1	1
27	IDLER SHAFT UPPER BEARING	1	1
28	IDLER SHAFT LOWER BEARING	1	1
29	FINAL SHAFT UPPER BEARING	1	1
30	FINAL SHAFT LOWER BEARING	1	1
31	TEE HOUSING BEARING	2	2
32	TEE HOUSING BEARING CUP	2	2
33	NOZZLE HOUSING BEARING	2	2
34	NOZZLE HOUSING BEARING CUP	2	2
35	TEE HOUSING SEAL	2	2
36	NOZZLE HOUSING SEAL	2	2
37	ROTOR SHAFT SEAL	3	3
38	FINAL SHAFT SEAL	1	1
39	STATOR RETAINING RING	1	1
40	GEARBOX BOLT	3	3
41	GEARBOX BOLT LOCKWASHER	3	3
42	ROTOR SHAFT SPACER	1	1
43	GEARBOX COVER DOWEL	1	1
44	618 BEVEL GEAR DRIVE PIN	SEE NOTE 3 ■	
45	SEAL HOUSING SPACER	1	1
46	CENTER CARBIDE BEARING SUB–ASSY	1	1
47	UPPER CARBIDE BEARING SUB–ASSY	1	1
48	STRAINER	1	0
49	O–RING – CLUTCH 3" ID x 3/16"	SEE NOTE 3 ■	
50	O–RING – 611–3A, 660–3A	1 OR 3	
51	O–RING – 613	1	1
52	O–RING – GEARBOX SCREW	3	3
53	O–RING – GEARBOX STEM	1	1
54	O–RING – GEARBOX COVER	1	1
55	O–RING – 660–D, 660–DX	1	1
56	GEARBOX COVER BOLT 3/4"	2	2
57	LOCKWASHER	5	5
58	NAMEPLATE BOLT 5/8"	2	2
59	ROTOR RETAINING NUT	1	1
61	STATOR – LOW PRESSURE – 1	SEE ROTOR/ STATOR TABULATION	
62	STATOR – MODIFIED LOW PRESSURE – 2		
63	STATOR – HIGH PRESSURE – 3		
64	STATOR – HIGH VOLUME – 4		
65	STATOR – 55 DEGREE – 5 (363 ONLY)		
66	IDLER GEAR – 17T/24T	SEE GEARSET TABULATION	
67	IDLER GEAR – 10T/17T		

TJ___ TANKJET (CIP VERSION)			
ITEM NO.	DESCRIPTION	QTY. 360	QTY. 363
4	TEE HOUSING	1	1
5E	NOZZLE HOUSING–DUAL CLUTCH		1
5F	NOZZLE HOUSING–DUAL PIN DRIVE		0
5G	NOZZLE HOUSING–TRIPLE CLUTCH		
5H	NOZZLE HOUSING–TRIPLE PIN DRIVE		
12	RING GEAR W/CIP SLOTS		1
60	SELF RINSE NOZZLE ASSEMBLY		1

GEAR RATIO GEARSET 273:1 OR 665:1			
ITEM NO.	DESCRIPTION	QTY. 273	QTY. 665
22	IDLER GEAR – 10T/24T LOWER	2	2
23	IDLER GEAR – 10T/24T UPPER	1	3
25	FINAL SHAFT DRIVE GEAR – 24T	1	1
66	IDLER GEAR – 17T/24T	1	0
67	IDLER GEAR – 10T/17T	1	0
IDLER GEAR BUSHING REPLACEMENT **(PTFE ONLY)**		5	5

ROTOR / STATOR COMBINATION	QTY. 360	QTY. 363
STANDARD – 0	1	0
LOW PRESSURE – 1		
MODIFIED LOW PRESSURE – 2		
HIGH PRESSURE – 3		
HIGH VOLUME – 4		
HIGH VOLUME 2 – 5		
LOW FLOW – 363 MODEL ONLY	0	1

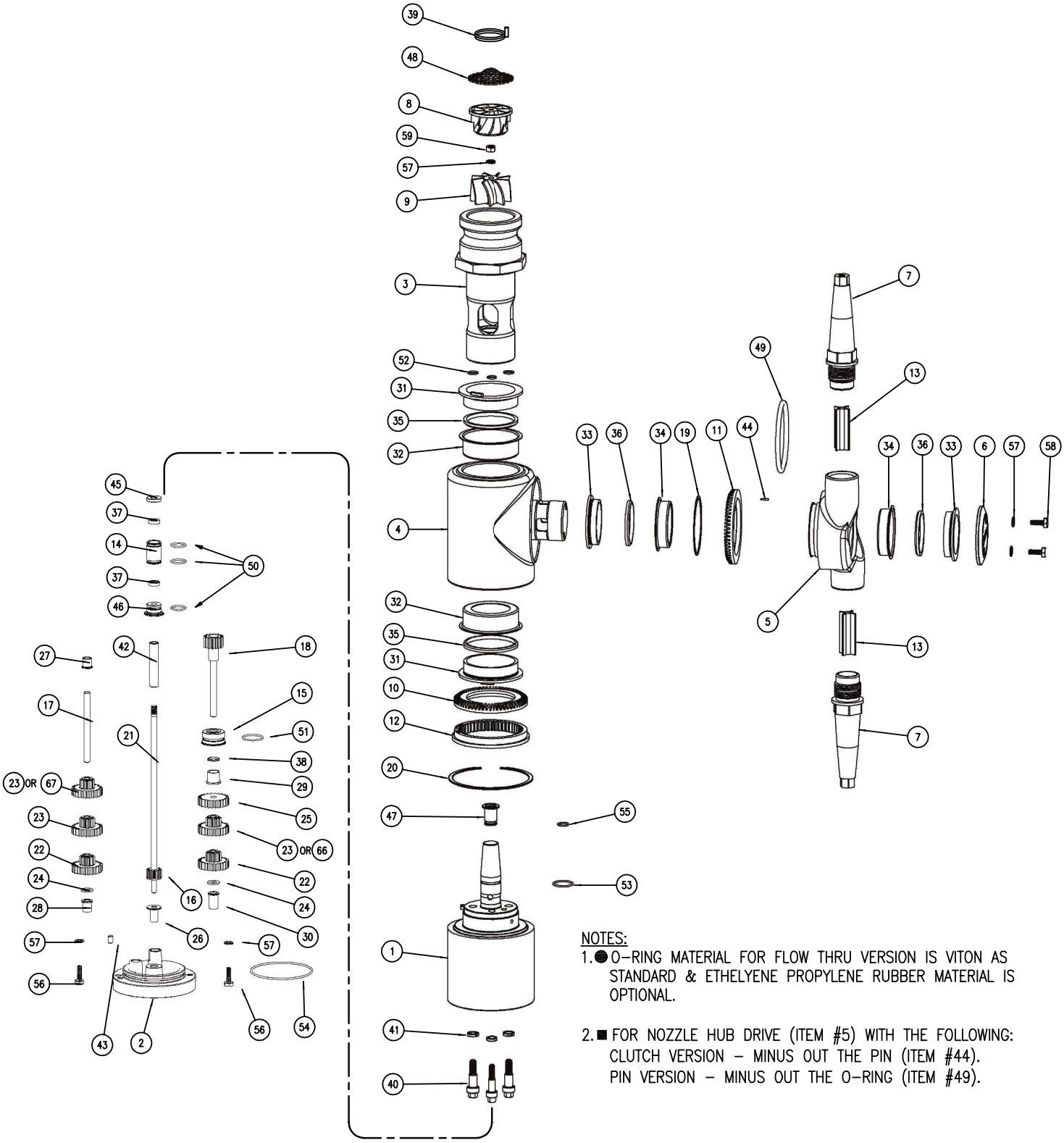

NOTES:

1. ● O-RING MATERIAL FOR FLOW THRU VERSION IS VITON AS STANDARD & ETHELYENE PROPYLENE RUBBER MATERIAL IS OPTIONAL.

2. ■ FOR NOZZLE HUB DRIVE (ITEM #5) WITH THE FOLLOWING:
   CLUTCH VERSION – MINUS OUT THE PIN (ITEM #44).
   PIN VERSION – MINUS OUT THE O-RING (ITEM #49).

#TJ180-_-___-___-___ TANKJET ASSEMBLY		
ITEM NO.	DESCRIPTION	QTY.
1	GEARBOX	1
2	GEARBOX COVER	1
3A	INLET STEM–2 1/2" QC x 2" NPT	1
3B	INLET STEM–2 1/2" QC x 2" BSPT	
3C	INLET STEM–O.D. THDS, 2" NPT	
3D	INLET STEM–O.D. THDS, 2" BSPT	
4	TEE HOUSING – DIRECTIONAL	1
5A	NOZZLE HOUSING–DIRECTIONAL	1
6	NAME PLATE	1
7A	NOZZLES – .250 (1/4") (WITH STREAM STRAIGHTENER)	3
7B	NOZZLES – .281 (9/32")	
7C	NOZZLES – .313 (5/16")	
7D	NOZZLES – .375 (3/8")	
7E	NOZZLES – .438 (7/16")	
7F	NOZZLES – .500 (1/2")	
7G	NOZZLES – .563 (9/16")	
7H	NOZZLES – .625 (5/8")	
8	STATOR	0 OR 1
9	ROTOR–STANDARD – 0	1
10	TEE HOUSING BEVEL GEAR	1
11	NOZZLE HOUSING BEVEL GEAR	1
12	RING GEAR	1
13	STREAM STRAIGHTENER (INCLUDED IN NOZZLES)	3
14	ROTOR SHAFT SEAL HOUSING	1
15	FINAL SHAFT BEARING RETAINER	1
16	ROTOR SHAFT PINION GEAR SUB–ASSY (174SS & TUNGSTEN CARBIDE)	1
17	IDLER SHAFT (CHROME PLATE)	1
18	FINAL SHAFT AND PINION ASSSEMBLY	1
19	BEVEL GEAR SNAP RING	1
20	RING GEAR RETAINING RING	1
21	ROTOR SHAFT ASSEMBLY (INCLUDED ITEM #16)	1
22	IDLER GEAR – 10T/24T LOWER	SEE GEARSET TAB.
23	IDLER GEAR – 10T/24T UPPER	
24	IDLER GEAR THRUST WASHER	2
25	24T FINAL SHAFT DRIVE GEAR	1
26	ROTOR SHAFT THRUST BEARING	1
27	IDLER SHAFT UPPER BEARING	1
28	IDLER SHAFT LOWER BEARING	1
29	FINAL SHAFT UPPER BEARING	1
30	FINAL SHAFT LOWER BEARING	1

#TJ180-_-___-___-___ TANKJET ASSEMBLY		
ITEM NO.	DESCRIPTION	QTY.
31	TEE HOUSING BEARING	2
32	TEE HOUSING BEARING CUP	2
33	NOZZLE HOUSING BEARING	2
34	NOZZLE HOUSING BEARING CUP	2
35	TEE HOUSING SEAL	2
36	NOZZLE HOUSING SEAL	2
37	ROTOR SHAFT SEAL	3
38	FINAL SHAFT SEAL	1
39	STATOR RETAINING RING	1
40	GEARBOX BOLT	3
41	GEARBOX BOLT LOCKWASHER	3
42	ROTOR SHAFT SPACER	1
43	GEARBOX COVER DOWEL	1
44	618 BEVEL GEAR DRIVE PIN	1
45	SEAL HOUSING SPACER	1
46	CENTER CARBIDE BEARING SUB–ASSY	1
47	UPPER CARBIDE BEARING SUB–ASSY	1
48	STRAINER	1
49		
50	O–RING – 611–3A, 660–3A	1 OR 3
51	O–RING – 613	1
52	O–RING – GEARBOX SCREW	3
53	O–RING – GEARBOX STEM	1
54	O–RING – GEARBOX COVER	1
55	O–RING – 660–D, 660–DX	1
56	GEARBOX COVER BOLT 3/4"	2
57	LOCKWASHER	5
58	NAMEPLATE BOLT 5/8"	2
59	ROTOR RETAINING NUT	1
61	STATOR – LOW PRESSURE – 1	SEE ROTOR/ STATOR TAB.
62	STATOR – MODIFIED LOW PRESSURE – 2	
63	STATOR – HIGH PRESSURE – 3	
64	STATOR – HIGH VOLUME – 4	
66	IDLER GEAR – 17T/24T	SEE GEARSET TAB.
67	IDLER GEAR – 10T/17T	

TJ___ TANKJET (CIP VERSION)		
ITEM NO.	DESCRIPTION	QTY.
4	TEE HOUSING	1
5H	NOZZLE HOUSING–TRIPLE PIN DRIVE	1
12	RING GEAR	1
60	SELF RINSE NOZZLE ASSEMBLY	1

GEAR RATIO GEARSET 273:1 OR 665:1			
ITEM NO.	DESCRIPTION	QTY.	
		273	665
22	IDLER GEAR – 10T/24T LOWER	2	2
23	IDLER GEAR – 10T/24T UPPER	1	3
25	FINAL SHAFT DRIVE GEAR – 24T	1	1
66	IDLER GEAR – 17T/24T	1	0
67	IDLER GEAR – 10T/17T	1	0
IDLER GEAR BUSHING REPLACEMENT **(PTFE ONLY)**		5	5

ROTOR / STATOR COMBINATION	QTY.
STANDARD – 0	1
LOW PRESSURE – 1	
MODIFIED LOW PRESSURE – 2	
HIGH PRESSURE – 3	
HIGH VOLUME – 4	
HIGH VOLUME 2 – 5	

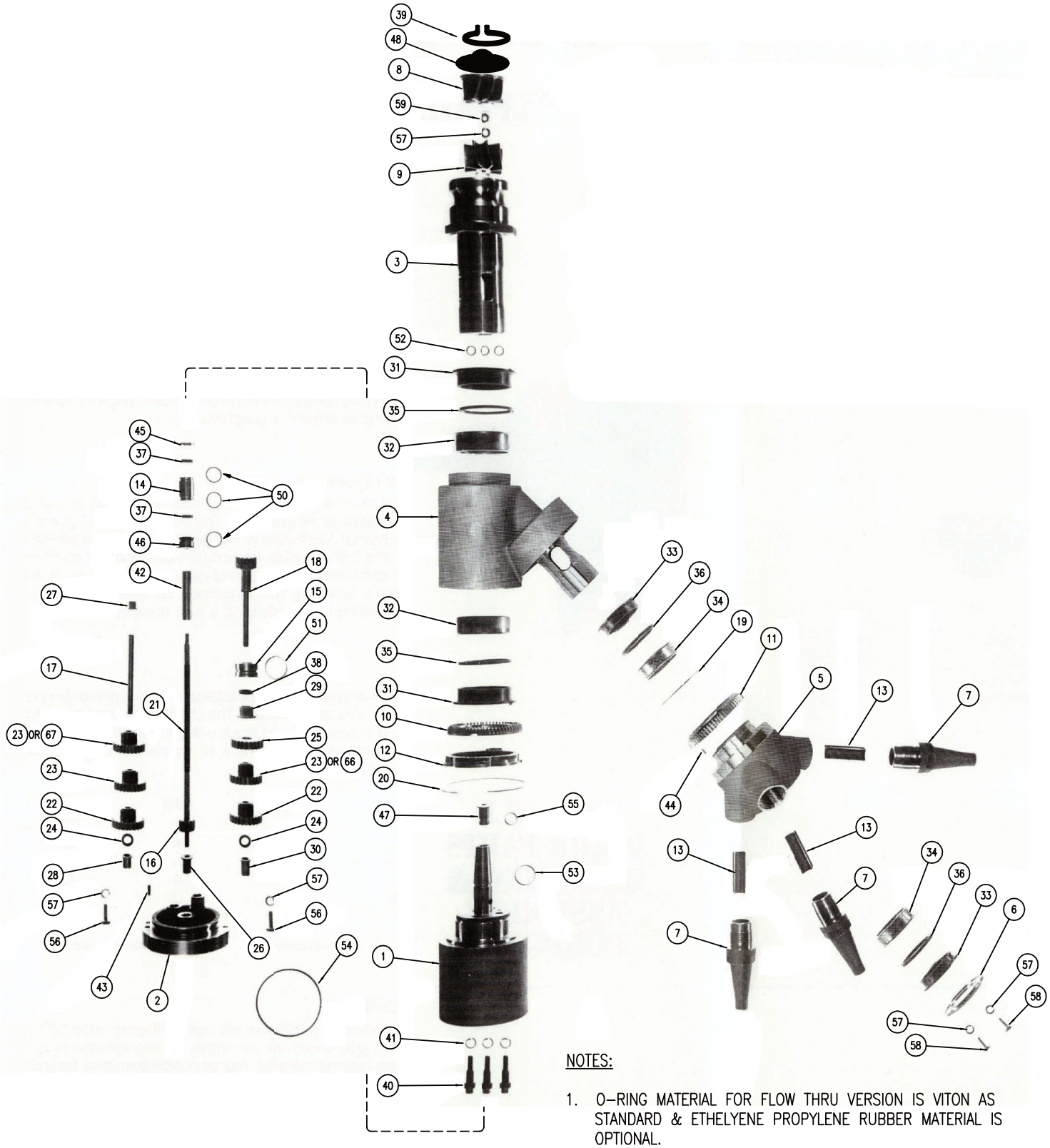

NOTES:

1. O–RING MATERIAL FOR FLOW THRU VERSION IS VITON AS STANDARD & ETHELYENE PROPYLENE RUBBER MATERIAL IS OPTIONAL.

BEARING-CUPS REPAIR KIT (FOR #TJ360 & 363) ABCK___B-VI ABCK___B-VIFT (FLOW THRU)			
ITEM NO.	DESCRIPTION	QTY.	
		360	363
31	TEE HOUSING BEARING	2	2
32	TEE HOUSING BEARING CUP	2	2
33	NOZZLE HOUSING BEARING	2	2
34	NOZZLE HOUSING BEARING CUP	2	2
35	TEE HOUSING SEAL	2	2
36	NOZZLE HOUSING SEAL	2	2
37	ROTOR SHAFT SEAL	2	2
38	FINAL SHAFT SEAL	1	1
49	O-RING – (CLUTCH 3" ID x 3/16")	1	1
50	O-RING – (611-3A, 660-3A)	3	3
51	O-RING – (613)	1	1
52	O-RING – (GEARBOX SCREW)	3	3
53	O-RING – (GEARBOX STEM)	1	1
54	O-RING – (GEARBOX COVER)	1	1
55	O-RING – (660-D, 660-DX)	1	1

ABCK___B-EPR BEARING-CUPS REPAIR KIT (FLOW THRU) [#TJ360 & 363]			
ITEM NO.	DESCRIPTION	QTY.	
		360	363
31	TEE HOUSING BEARING	2	2
32	TEE HOUSING BEARING CUP	2	2
33	NOZZLE HOUSING BEARING	2	2
34	NOZZLE HOUSING BEARING CUP	2	2
35	TEE HOUSING SEAL	2	2
36	NOZZLE HOUSING SEAL	2	2
49	O-RING – (CLUTCH 3" ID x 3/16")	1	1
50	O-RING – (611-3A, 660-3A)	3	3
51	O-RING – (613)	1	1
52	O-RING – (GEARBOX SCREW)	3	3
53	O-RING – (GEARBOX STEM)	1	1
54	O-RING – (GEARBOX COVER)	1	1
55	O-RING – (660-D, 660-DX)	1	1

ABCK___O-EPR EPR "O" RING KIT (FLOW THRU) [ALL MODELS]		
ITEM NO.	DESCRIPTION	QTY.
49	O-RING – CLUTCH 3" ID x 3/16"	1
50	O-RING – 611-3A, 660-3A	3
51	O-RING – 613	1
52	O-RING – GEARBOX SCREW	3
53	O-RING – GEARBOX STEM	1
54	O-RING – GEARBOX COVER	1
55	O-RING (660-D, 660-DX)	1

VITON "O" RING KIT (FOR ALL MODELS) ABCK___O-VI VITON ABCK___O-VIFT VITON (FLOW THRU)		
ITEM NO.	DESCRIPTION	QTY.
49	O-RING – CLUTCH 3" ID x 3/16"	1
50	O-RING – 611-3A, 660-3A	3 OR 1
51	O-RING – 613	1
52	O-RING – GEARBOX SCREW	3
53	O-RING – GEARBOX STEM	1
54	O-RING – GEARBOX COVER	1
55	O-RING (660-D, 660-DX)	1

BEARING-CUPS REPAIR KIT (FOR #TJ180 ONLY) ABCK___B-VI ABCK___B-VIFT (FLOW THRU)		
ITEM NO.	DESCRIPTION	QTY.
31	TEE HOUSING BEARING	2
32	TEE HOUSING BEARING CUP	2
33	NOZZLE HOUSING BEARING	2
34	NOZZLE HOUSING BEARING CUP	2
35	TEE HOUSING SEAL	2
36	NOZZLE HOUSING SEAL	2
37	ROTOR SHAFT SEAL	2
38	FINAL SHAFT SEAL	1
50	O-RING – (611-3A, 660-3A)	2
51	O-RING – (613)	1
52	O-RING – (GEARBOX SCREW)	3
53	O-RING – (GEARBOX STEM)	1
54	O-RING – (GEARBOX COVER)	1
55	O-RING – (660-D, 660-DX)	2

ABCK___B-EPR BEARING-CUPS REPAIR KIT (FLOW THRU) [#TJ180 ONLY]		
ITEM NO.	DESCRIPTION	QTY.
31	TEE HOUSING BEARING	2
32	TEE HOUSING BEARING CUP	2
33	NOZZLE HOUSING BEARING	2
34	NOZZLE HOUSING BEARING CUP	2
35	TEE HOUSING SEAL	2
36	NOZZLE HOUSING SEAL	2
50	O-RING – (611-3A, 660-3A)	2
51	O-RING – (613)	1
52	O-RING – (GEARBOX SCREW)	3
53	O-RING – (GEARBOX STEM)	1
54	O-RING – (GEARBOX COVER)	1
55	O-RING – (660-D, 660-DX)	2

ABCK___G-___-__ GEAR RATIO GEARSET 273:1 OR 665:1 [ALL MODELS]			
ITEM NO.	DESCRIPTION	QTY.	
		273	665
22	IDLER GEAR – 10T/24T LOWER	2	2
23	IDLER GEAR – 10T/24T UPPER	1	3
25	FINAL SHAFT DRIVE GEAR – 24T	1	1
66	IDLER GEAR – 17T/24T	1	0
67	IDLER GEAR – 10T/17T	1	0

ABCK___G-BROL GEARBOX BEARING REPLACEMENT KIT [OILITE] LUBE ONLY [ALL MODELS]		
ITEM NO.	DESCRIPTION	QTY.
26	ROTOR SHAFT THRUST BEARING	1
27	IDLER SHAFT UPPER BEARING	1
28	IDLER SHAFT LOWER BEARING	1
29	FINAL SHAFT UPPER BEARING	1
30	FINAL SHAFT LOWER BEARING	1

ABCK___G-PTFE GEARBOX BEARING REPLACEMENT KIT [PTFE] FLOW THRU ONLY [ALL MODELS]		
ITEM NO.	DESCRIPTION	QTY.
--	IDLER GEAR BEARING (RULON)	5
26	ROTOR SHAFT THRUST BEARING	1
27	IDLER SHAFT UPPER BEARING	1
28	IDLER SHAFT LOWER BEARING	1
29	FINAL SHAFT UPPER BEARING	1
30	FINAL SHAFT LOWER BEARING	1

ABCK___T TOOL KIT (SELLERS #101) [ALL MODELS]	
DESCRIPTION	QTY.
634 BEARING CUP REMOVAL TOOL	1
632 BEARING CUP REMOVAL TOOL	1
632/634 BEARING CUP INSTALLATION TOOL	1
660-3A & 611-3B REMOVAL TOOL	1
660-3A, 627, 628 & 630 INSTALLATION TOOL	1
626-A(T), INSTALLATION TOOL	1
629-A(T), 629-B(T) REMOVAL TOOL	1
622-A SEAL PROTECTOR TOOL	1
623-3T GEARSET BEARING REMOVAL TOOL	1

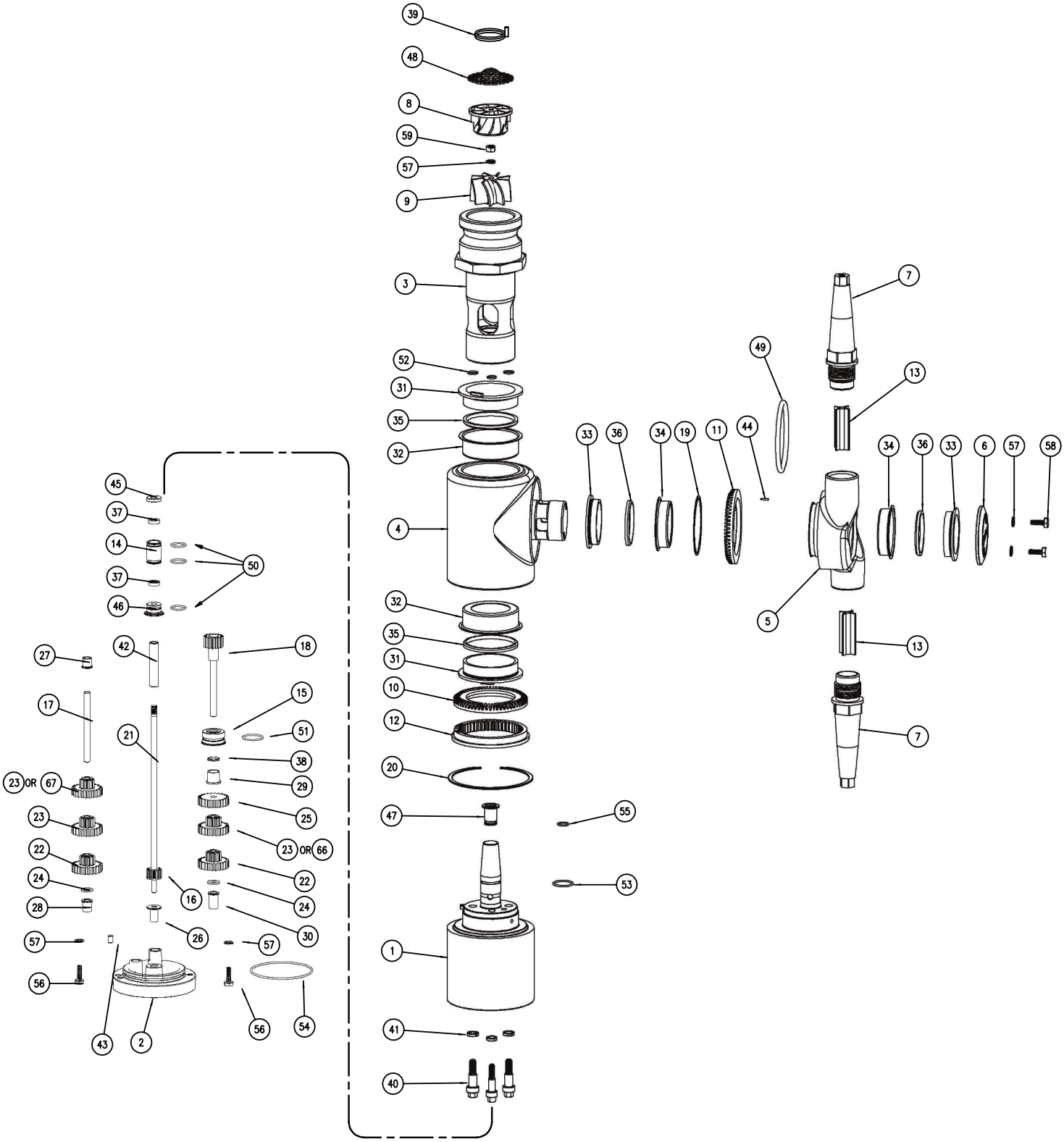
39
48
8
59
57
9
3
52
31
35
32
4
32
35
31
10
12
20
47
55
53
1
41
40
45
37
14
50
37
46
27
42
18
17
15
21
51
38
29
23 OR 67
25
23
23 OR 66
22
22
24
16
24
28
30
57
26
57
56
56
54
43
2
33
36
34
19
11
44
49
7
13
34
36
33
6
57
58
5
13
7

12/7/2020
Wheaton, Illinois, USA

EC DECLARATION OF INCORPORATION

We, Spraying Systems Co.®

North Avenue and Schmale Road, P.O. Box 7900,
Wheaton, IL 60187-7901
Tel: 1.800.95.SPRAY Intl. Tel: 1.630.665.5000
Fax: 1.888.95.SPRAY Intl. Fax: 1.630.260.0842
Visit our Website at www.spray.com for local representatives

in accordance with the following directive(s):

2006/42/EC The Machinery Directive

hereby declare that:

Equipment Tank cleaning devices, fluid-driven
Model number TJ360, TJ363, and TJ180

is in conformity with the applicable requirements of the following documents:

Ref. no.	Title	Edition/Date
EN ISO 4413	Hydraulic fluid power — General rules and safety requirements for systems and their components	2010
EN 12100	Safety of machinery – General principles for design risk assessment and risk reduction	2010
BS EN ISO 14121-1	Safety of machinery – Risk assessment Part 1: Principles	2007
ASME- B31.1 ASME	Code for Pressure Piping	2020

I hereby declare that the equipment named above has been designed to comply with the relevant sections of the above referenced specifications. The unit complies with all applicable Essential Requirements of the Directives.

Signed by:

Robert J. Adams, P.E.
Director of Engineering-Industrial Division
Spraying Systems Co.®

Spraying Systems Co.®
Experts in Spray Technology

P.O. Box 7900, Wheaton, IL 60187-7901 USA

Tel: 1.800.95.SPRAY Intl. Tel: 1.630.665.5000 Email: info@spray.com

www.spray.com

© 2026 Spraying Systems Co.

CERTIFIED
ISO 9001
ISO 14001