지시외 용접치수	지시외 모서리부분	지시외일반 모서리제거 C = 0.3~1.2

지시외일반치수		0.5 ~ 6	6 ~ 30	30 ~ 120	120 ~ 315	315 ~ 1000	1000 ~ 2000
허용일반공차	구멍						
	축	±0.1	±0.2	±0.3	±0.5	±0.8	±1.2

표면거칠기								
Ra	▽	25	12.5	6.3	3.2	1.6	0.8	0.2	0.1
Rmax		100S	50S	25S	12.5S	6.3S	3.2S	0.8S	0.4S
다듬기		▽		▽▽		▽▽▽		▽▽▽▽	

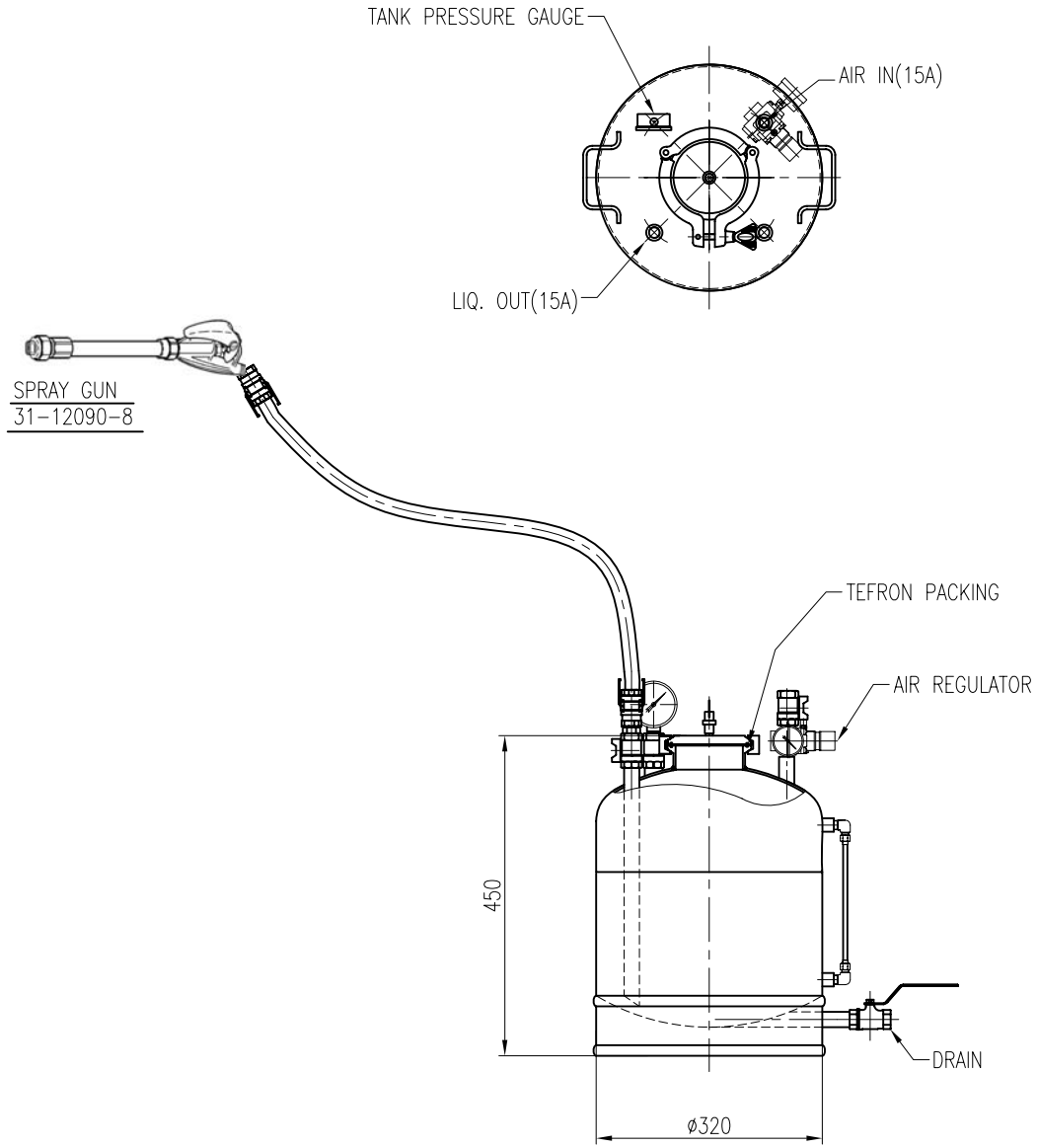

GUNJET ORDERING INFORMATION

NO. 31-12090-8

GUNJET No.	EXTENSION No.	"L" EXTENSION LENGTH	STEM No.
31-12090-8	12086-8	8"	12091-8
31-12090-18	12086-18	18"	12091-18
31-12090-24	12086-24	24"	12091-24
31-12090-36	12086-36	36"	12091-36

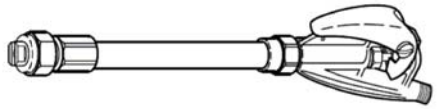

MATERIAL CONSTRUCTION – BRASS WITH ALUMINUM EXTENSION PIPE

- FOR SPRAYING HARD TO REACH AREAS AT PRESSURES UP TP 500 P.S.I.
- VALVE STEM IS POSITIONED DIRECTLY BEHIND THE SPRAY TIP PROVIDING QUICK DRIP-FREE SHUT-OFF.
- GUNJET PACKING AND VALVE SEAT MADE OF TEFON.
- CHOICE OF EXTENSION LENGTHS.
- LIGHT WEIGHT COMBINED WITH DURABLE CONSTRUCTION.

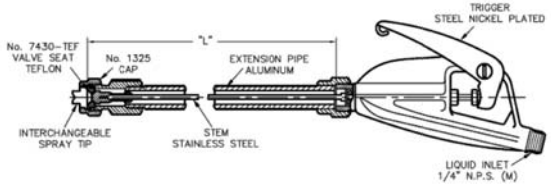

FOR INTERCHANGEABLE SPRAY TIPS SEE INDUSTRIAL CATALOG

DESCRIPTION: No. 31-12090-- GUNJET WITH EXTENSION

Spraying Systems Co.
Spray Nozzles and Accessories
P.O. Box 7900 - Wheaton, IL 60189-7900

Rev. No. 1 | Ref. | Data Sheet No. 12092 | SHEET OF

PRESSURE TANK ORDERING INFOMATION

NO. 22140-5-304SS

MODEL No.	CAPACITY GALLONS	CAPACITY LITERS	"A" INSIDE DIAMETER	"B" TANK HEIGHT	APPROXIMATE WEIGHT		MAXIMUM TANK WORKING PRESSURE @ 100°F (38°C) PSI	bar
22140-1-304SS	1	3.8	9" (229 mm)	8 1/2" (216 mm)	9 1/4 Lbs.	4.2 kg	140	9.65
22140-2-304SS	2	7.6	9" (229 mm)	11 5/8" (295 mm)	12 Lbs.	5.5 kg	140	9.65
22140-3-304SS	3	11.4	9" (229 mm)	15 1/4" (387 mm)	14 Lbs.	6.4 kg	140	9.65
22140-5-304SS	5	18.9	9" (229 mm)	22 1/2" (572 mm)	18 1/2 Lbs.	8.4 kg	140	9.65
22140-10-304SS	10	37.9	12" (305 mm)	25 1/2" (648 mm)	28 1/2 Lbs.	13.0 kg	130	8.95
22140-16-304SS	16	60.6	12" (305 mm)	38" (965 mm)	40 1/2 Lbs.	18.4 kg	130	8.95

NO.	DESCRIPTION	MAT'(KS)	UNIT QUANTITY	TOTAL QUANTITY	PERUNIT WEIGHT(kg)	TOTAL WEIGHT(kg)	REMARK'S
–	–	–		–	–	–	–

Spraying Systems Co., Korea

SCALE	N/S	PROJECTION	
SIZE	A1	DIMENSION	mm

TITLE: – PLANT – FACILITY — PRESSURE TANK ASSEMBLY LAY-OUT

REF. DWG. NO.: EQUIPMENT 0; MAKER DWG. NO.

SSCO.	DRAWN	CHECKED	REVIEWED	APPROVED	MAKER	DRAWN	CHECKED	REVIEWED	APPROVED
SIGNATURE	0							–	
DATE	0							–	

SSCO DWG. NO.